# Technical data sheet

## Wall and ceiling bracket A2

## Item number: 6363748

Wall and ceiling clamp for universal structural fastening.

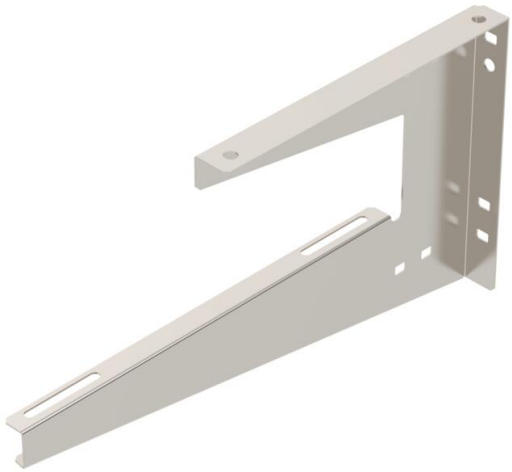

CE

| | |
|---|---|
| A2 | Stainless steel |
| 2B | Bright, treated |

### Master data

| | |
|---|---|
| Item number | 6363748 |
| Type | WDB L 300 A2 |
| Description 1 | Wall and ceiling bracket |
| Description 2 | lightweight version |
| Manufacturer | OBO |
| Dimension | B300mm |
| Colour | stainless steel |
| Material | Stainless steel 1.4301 |
| Surface | Bright, treated |
| Surface standard | |
| Smallest sales unit | 1 |
| Unit of quantity | Piece |
| Weight | 52 kg |
| Weight unit | kg/100 pc. |
| CO2 Footprint (GWP) Cradle-to-Gate | 3,7738 kg CO2e / 1 Piece |

# Technical data sheet

## Wall and ceiling bracket A2

## Item number: 6363748

### Dimensions

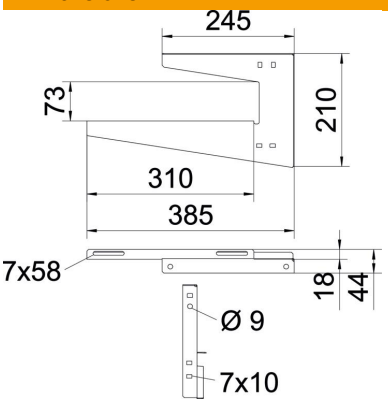


| | |
|---|---|
| Length | 385 mm |
| Width | 310 mm |
| Height | 210 mm |
| Dimension A | 245 mm |
| Dimension B | 310 mm |
| Dimension H | 210 mm |
| Dimension H1 (mm) | 73 |
| Dimension L | 385 mm |

### Technical data

| | |
|---|---|
| Version for | Suspension bracket (C clamp) |
| F in kN ceiling | 0.2 kN |
| F in kN wall | 0.2 kN |
| Maintain electrical functions | no |
| for width min. | 300 |
| Suitable for metric threaded rod | 8 |
| Suitable for mesh cable tray | yes |
| Suitable for cable ladder | yes |
| Suitable for cable tray | yes |
| Suitable for tray/ladder width | 300 mm |
| Hole diameter | 7 mm |
| Material thickness | 1.25 mm |
| Tray fastening | Screw-on |
| ROHS-conformant | yes |
| Adjustable | no |

| Wall fastening | | | | | | |
|---|---|---|---|---|---|---|
| | Max. load [kN] | | | | | |
| | Bracket length [mm] | | | | | |
| Anchor type | 50 | 100 | 150 | 200 | 300 | 400 |
| BZ-U 8-30-41/95 | 0.40 | 0.25 | 0.22 | 0.30 | 0.20 | 0.12 |

Systemtest in Anlehnung an DIN EN 61537 in Kombination mit Kabeltragsystem RKS-Magic®. Max. Belastung F ges = Kabelgewicht + Kabelrinne + Wand-/Deckenbügel. Die Tragfähigkeitsangaben erhöhen sich um ein Vielfaches beim Einsatz im ungerissenen Beton. Die angegebenen Werte basieren auf Beton der Festigkeitsklasse C20/C25.