Technical data sheet

Wall and ceiling bracket FT

Item number: 6363730

Wall and ceiling bracket for universal structural fastening.

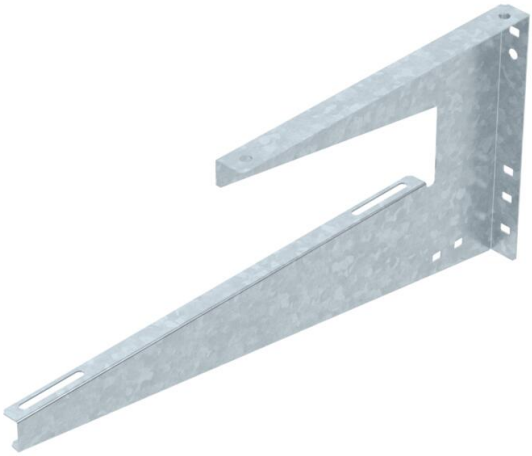

CE

St Steel

FT Hot-dip galvanised

Master data

Item number	6363730
Type	WDB L 400 FT
Description 1	Wall and ceiling bracket
Description 2	lightweight version
Manufacturer	OBO
Dimension	B400mm
Colour	zinc
Material	Steel
Surface	Hot-dip galvanised
Surface standard	DIN EN ISO 1461
Smallest sales unit	1
Unit of quantity	Piece
Weight	78 kg
Weight unit	kg/100 pc.
CO2 Footprint (GWP) Cradle-to-Gate	2,2694 kg CO2e / 1 Piece

Technical data sheet

Wall and ceiling bracket FT

Item number: 6363730

Dimensions

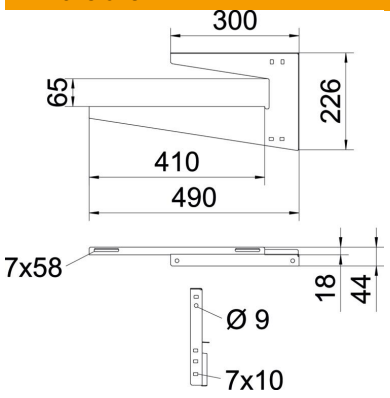

Length	490 mm
Width	410 mm
Height	226 mm
Dimension A	300 mm
Dimension B	410 mm
Dimension H	226 mm
Dimension H1 (mm)	65
Dimension L	490 mm

Technical data

Version for	Suspension bracket (C clamp)
F in kN ceiling	0.12 kN
F in kN wall	0.12 kN
Maintain electrical functions	no
for width min.	400
Suitable for metric threaded rod	8
Suitable for mesh cable tray	yes
Suitable for cable ladder	yes
Suitable for cable tray	yes
Suitable for tray/ladder width	400 mm
Hole diameter	7 mm
Material thickness	1.25 mm
Tray fastening	Screw-on
ROHS-conformant	yes
Adjustable	no

Wall fastening						
	Max. load [kN]					
	Bracket length [mm]					
Anchor type	50	100	150	200	300	400
BZ-U 8-30-41/95	0.40	0.25	0.22	0.30	0.20	0.12

Systemtest in Anlehnung an DIN EN 61537 in Kombination mit Kabeltragsystem RKS-Magic®. Max. Belastung F ges = Kabelgewicht + Kabelrinne + Wand-/Deckenbügel. Die Tragfähigkeitsangaben erhöhen sich um ein Vielfaches beim Einsatz im ungerissenen Beton. Die angegebenen Werte basieren auf Beton der Festigkeitsklasse C20/C25.