# Technical data sheet

## US 5 support A2

## Item number: 6341390

Suspended support (U profile) with welded head plate.
For fastening to horizontal concrete ceilings and steel girders. For bracket widths of 400 mm or more, or if the bracket is mounted at the end of a suspended support, we recommend the use of the spacer, type DSK 45.

| | |
|---|---|
| A2 | Stainless steel |
| 2B | Bright, treated |

### Master data

| | |
|---|---|
| Item number | 6341390 |
| Type | US 5 K 100 A2 |
| Description 1 | Support |
| Description 2 | with welded head plate |
| Manufacturer | OBO |
| Dimension | 50x50x1000 |
| Colour | stainless steel |
| Material | Stainless steel 1.4301 |
| Surface | Bright, treated |
| Surface standard | |
| Smallest sales unit | 1 |
| Unit of quantity | Piece |
| Weight | 300 kg |
| Weight unit | kg/100 pc. |
| CO2 Footprint (GWP) Cradle-to-Gate | 15,4884 kg CO2e / 1 Piece |

# Technical data sheet

## US 5 support A2

## Item number: 6341390

### Dimensions

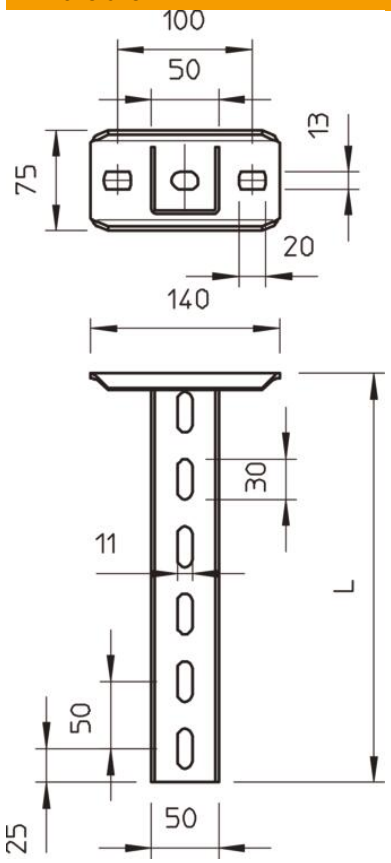


| | |
|---|---|
| Length | 1,000 mm |
| Width | 50 mm |
| Height | 50 mm |

### Technical data

| | |
|---|---|
| Version for | U profile |
| Bracket length 200 | 5.75 kN |
| Bracket length 400 | 3.1 kN |
| Bracket length 600 | 2.2 kN |
| Maintain electrical functions | no |
| Material thickness | 2.5 mm |
| Maximum tensile load | 10 kN |
| ROHS-conformant | yes |

# Technical data sheet

## US 5 support A2

## Item number: 6341390

### Loads

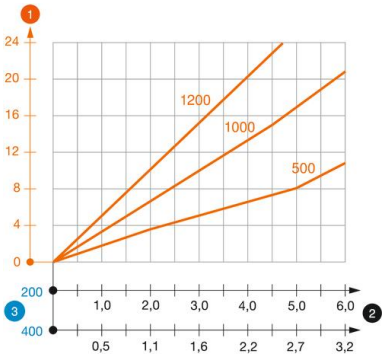


**Load diagram, U support, type US 5 K VA**

1. Bending of the end of the suspended support at permitted bracket load
2. Permitted bracket load in kN without man load
3. Bracket length in mm

— Load curves with support lengths in mm

### Characteristic anchor load values for US 5 K support

| Single-sided load | | | | |
|---|---|---|---|---|
| | Max. load [kN] | | | |
| | Bracket width [mm] | | | |
| Anchor type | 110% | 210 | 310 | 410 |
| BZ3 10x90/0-30 | 4.31 | 3.18 | 2.51 | 2.06 |
| BZ3 12x110/0-35 | 5.82 | 4.29 | 3.39 | 2.77 |

Max. total load F = cable weight + cable tray + bracket + suspended support. The tabular values for double-sided loads take the available axis spacing ai = 10 cm into account. The stated values are based on uncracked concrete of compressive strength C20/25. Please comply with the installation conditions of ETA(anchors).