Technical data sheet

45° angle connector, horizontal, inner strut

Item number: 6232612

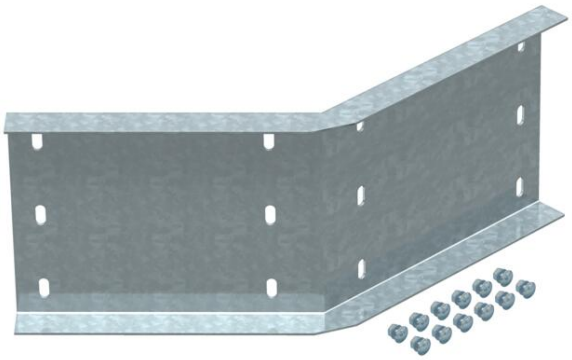

45° angle connector, horizontal, for wide span cable ladders of 200 mm side height.
Including appropriate bolts, washers and nuts.

St Steel

FT Hot-dip galvanised

Master data

Item number	6232612
Type	WRWV 200 I FT
Description 1	45° inside angle connector
Description 2	for wide span cable ladder 200
Manufacturer	OBO
Dimension	200x500
Colour	zinc
Material	Steel
Surface	Hot-dip galvanised
Surface standard	DIN EN ISO 1461
Smallest sales unit	4
Unit of quantity	Piece
Weight	322 kg
Weight unit	kg/100 pc.
CO2 Footprint (GWP) Cradle-to-Gate	8,7339 kg CO2e / 1 Piece

Technical data sheet

45° angle connector, horizontal, inner strut

Item number: 6232612

Dimensions

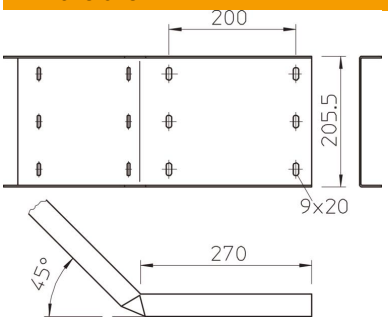

Length	540 mm
Width	20 mm
Height	200 mm
Plate thickness	2.5 mm

Technical data

Version for	Angle connector
Maintain electrical functions	no
Suitable for mesh cable tray	no
Suitable for cable ladder	yes
Suitable for cable tray	yes
Suitable for cable tray system height	200 mm
Adjustable connector, horizontal	no
Articulated connector, vertical	no
ROHS-conformant	yes
Rustproof steel, pickled	no
Connection type	Screw connector