Technical data sheet

Multifunctional connector FT

Item number: 6225780

Multifunctional connector for joining cable ladders with a side height of 110 mm. Symmetrical and asymmetrical reductions, infinitely adjustable bends between 0–60° and add-on tees can be created.

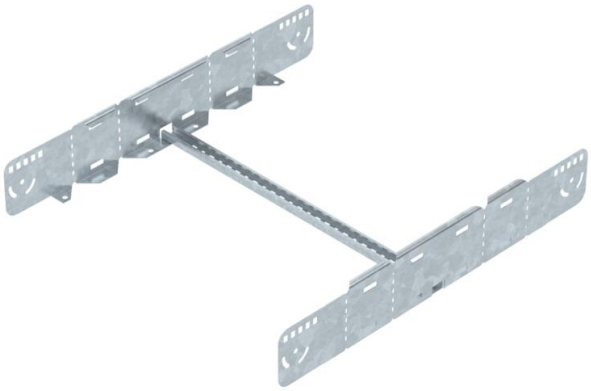

St Steel

FT Hot-dip galvanised

Master data

Item number	6225780
Type	LMFV 1160 FT
Description 1	Multifunctional connector
Description 2	for cable ladder
Manufacturer	OBO
Dimension	110x600
Colour	zinc
Material	Steel
Surface	Hot-dip galvanised
Surface standard	DIN EN ISO 1461
Smallest sales unit	1
Unit of quantity	Piece
Weight	248.8 kg
Weight unit	kg/100 pc.
CO2 Footprint (GWP) Cradle-to-Gate	7,1455 kg CO2e / 1 Piece

Technical data sheet

Multifunctional connector FT

Item number: 6225780

Dimensions

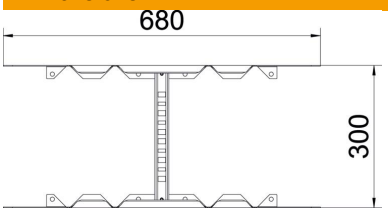

Length	680 mm
Width	600 mm
Height	110 mm
Plate thickness	1.5 mm
Dimension B	600 mm

Technical data

Version for	Straight and angle connector
Maintain electrical functions	no
Suitable for mesh cable tray	no
Suitable for cable ladder	yes
Suitable for cable tray	no
Suitable for cable support system width, max.	600 mm
Suitable for cable support system width, min.	600 mm
Suitable for cable tray system height	110 mm
Adjustable connector, horizontal	no
Articulated connector, vertical	no
ROHS-conformant	yes
Rustproof steel, pickled	no
Connection type	Screw connector