Technical data sheet

Cable ladder LG 60, 6 m VS A2

Item number: 6208709

Cable ladder with perforated side rail of side height 60 mm with riveted C profile frames, open in an upwards direction (VS version).
The cable ladder is shipped folded up.

You can find the appropriate type 2056 clamp clip in the vertical ladder systems section.
Magnetic shield insulation without cover 10 dB, with cover 15 dB.

EMV EMC | CE | UK CA | 60 | 16-17

A2 Stainless steel

2B Bright, treated

Master data

Item number	6208709
Type	LG 650 VS6 A2
Description 1	Cable ladder
Description 2	perforated, with VS rung
Manufacturer	OBO
Dimension	60x500x6000
Colour	stainless steel
Material	Stainless steel 1.4301
Surface	Bright, treated
Surface standard	
Smallest sales unit	6
Unit of quantity	Metre
Weight	332.4 kg
Weight unit	kg/100 m
CO2 Footprint (GWP) Cradle-to-Gate	17,232 kg CO2e / 1 Meter

Technical data sheet

Cable ladder LG 60, 6 m VS A2

Item number: 6208709

Dimensions

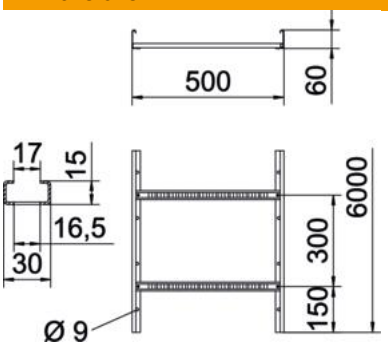

Dimension	60x500x6000
Length	6,000 mm
Width	500 mm
Height	60 mm
Dimension B	500 mm
Rung slot dimension	16.50

Technical data

Version of the rungs	Profile perforated
Side rail version	Flat profile
Fastening of rung	Blind riveted
Mounting system fastening type	Floor Ceiling Wall
Maintain electrical functions	no
Usable cross-section	248 cm²
Usable cross-section	24800 mm²
ROHS-conformant	yes
Rustproof steel, pickled	no
Side perforation	yes
Rung distance	300 mm
Wide-span version	no
Rail thickness	1.5 mm

Technical data sheet

Cable ladder LG 60, 6 m VS A2

Item number: 6208709

Loads

Insertable support spacings, min.	1.5 m
Insertable support spacings, max.	5 m
Support spacing 1.5 m	3.1 kN/m
Support spacing 2.0 m	2.25 kN/m
Support spacing 2.5 m	1.5 kN/m
Support spacing 3.0 m	1.1 kN/m
Support spacing 3.5 m	0.75 kN/m
Support spacing 4.0 m	0.45 kN/m
Support spacing 4.5 m	0.3 kN/m
Support spacing 5.0 m	0.15 kN/m

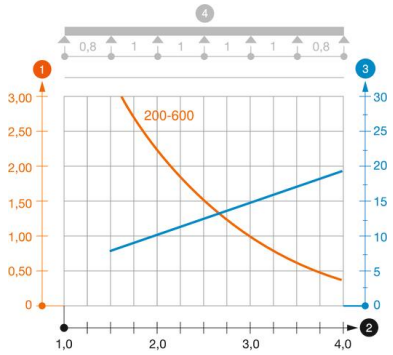

Load diagram, cable ladder, type LG 60 VS

1. Permitted cable tray/ladder load in kN/m without man load
2. Support width in m
3. Rail bend in mm at permitted kN/m
4. Load scheme during testing

— Load curve with cable tray/ladder width in mm

— Strut bend curve according to support width