Technical data sheet

LG 60 cable ladder, 3 m VSF FT

Item number: 6207541

Cable ladder for horizontal routing of cables. Can be used in the widths 200–400 mm as a standard support structure for the maintenance of electrical functionality according to DIN 4102 Part 12. Maintenance of electrical functionality classes E30 to E90. With riveted C profile rung, open in an upward direction.

E30 E60 E90

St Steel

FT Hot-dip galvanised

Master data

Item number	6207541
Type	LG 630 VSF 3 FT
Description 1	Cable ladder function maint.
Description 2	rungs distance 150 mm
Manufacturer	OBO
Dimension	60x300x3000
Colour	zinc
Material	Steel
Surface	Hot-dip galvanised
Surface standard	DIN EN ISO 1461
Smallest sales unit	3
Unit of quantity	Metre
Weight	379.333 kg
Weight unit	kg/100 m
CO2 Footprint (GWP) Cradle-to-Gate	5,3296 kg CO2e / 1 Meter

Technical data sheet

LG 60 cable ladder, 3 m VSF FT

Item number: 6207541

Dimensions

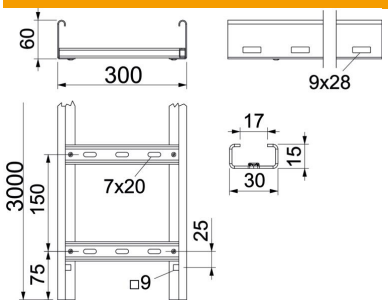

Length	3,000 mm
Width	300 mm
Height	60 mm
Dimension B	300 mm
Rung slot dimension	17.00

Technical data

Version of the rungs	Profile perforated
Side rail version	Profile (open)
Fastening of rung	Blind riveted
Maintain electrical functions	yes
Usable cross-section	14800 mm²
ROHS-conformant	yes
Rustproof steel, pickled	no
Side perforation	yes
Rung distance	150 mm
Wide-span version	no
Rail thickness	1.5 mm