Technical data sheet

Wiring trunking, type LKVH N 75100

Item number: 6178563

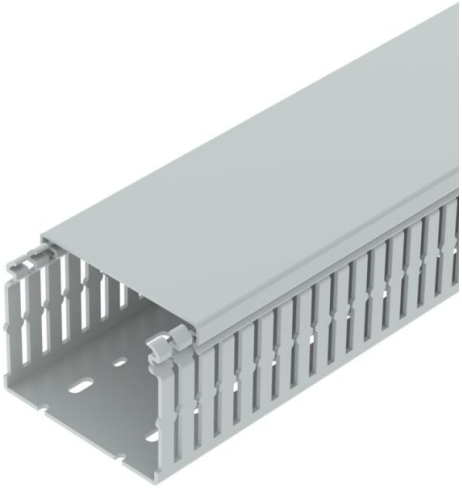

Halogen-free wiring duct according to DIN EN 50085-2-3, incl. cover and base perforation, for horizontal and vertical routing of electrical cables in the switchgear cabinet. Designed as a DIN duct. Retainers are broken out without tools. The flush-floor routing of cables is possible through predetermined break points. Tapering in the side slots prevents the cables from falling out. Tested to DIN EN 50085-2-3. Special lengths on request.

PC/ABS Polycarbonate/Acrylnitrile-butadiene-styrene

Master data

Item number	6178563
Type	LKVH N 75100
Description 1	Slotted cable trunking system
Description 2	halogen-free
Manufacturer	OBO
Dimension	75x100x2000
Colour	Light grey; RAL 7035
Material	Polycarbonate/Acrylnitrile-butadiene-styrene
Smallest sales unit	16
Unit of quantity	Metre
Weight	84 kg
Weight unit	kg/100 m
CO2 Footprint (GWP) Cradle-to-Gate	5,8363 kg CO2e / 1 Meter

Technical data sheet

Wiring trunking, type LKVH N 75100

Item number: 6178563

Dimensions

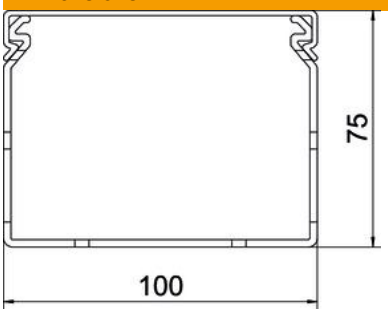

Length	2,000 mm
Width	100 mm
Height	75 mm

Technical data

Side wall version	Slotted
Fastening type	Base perforation
Flexible	no
Halogen-free	yes
Creepage current-resistant	yes
With cover	yes
Usable cross-section	65.34 cm²
ROHS-conformant	yes
Slot spacing	12.5 mm
Slot width	5 mm
Self-extinguishing	yes
Permitted temperature range, max.	90 °C
Permitted temperature range, min.	-25 °C