Technical data sheet

Wiring trunking, type LK4 N 60100

Item number: 6178211

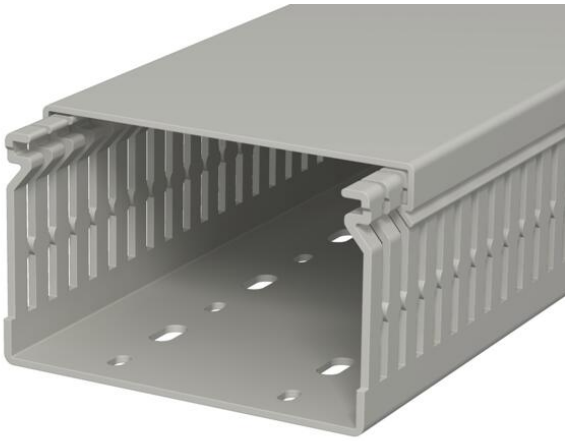

Wiring duct, incl. cover and base perforation, for horizontal and vertical routing of electrical cables in the switchgear cabinet. Designed as a metric duct. The nominal dimension of the system size corresponds to the internal dimension of the duct. Retainers are broken out without tools. The flush-floor routing of cables is possible through predetermined break points. Tapering in the side slots prevents the cables from falling out. Tested to DIN EN 50085-2-3. Special lengths on request.

PVC Polyvinylchloride

Master data

Item number	6178211
Type	LK4 N 60100
Description 1	Slotted cable trunking system
Manufacturer	OBO
Dimension	60x100x2000
Colour	Stone grey; RAL 7030
Material	Polyvinylchloride
Smallest sales unit	2
Unit of quantity	Metre
Weight	105.5 kg
Weight unit	kg/100 m
CO2 Footprint (GWP) Cradle-to-Gate	2,4454 kg CO2e / 1 Meter

Technical data sheet

Wiring trunking, type LK4 N 60100

Item number: 6178211

Dimensions

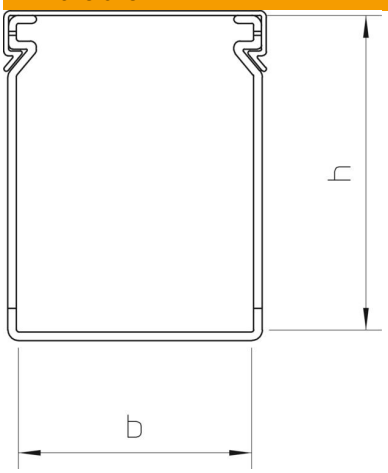

Length	2,000 mm
Width	100 mm
Height	60 mm

Technical data

Side wall version	Slotted
Fastening type	Base perforation
Flexible	no
Halogen-free	no
Creepage current-resistant	yes
With cover	yes
ROHS-conformant	yes
Slot spacing	10 mm
Slot width	4 mm
Self-extinguishing	yes
Permitted temperature range, max.	60 °C
Permitted temperature range, min.	-5 °C