Technical data sheet

Trunking, type WDKH 60090

Item number: 6175415

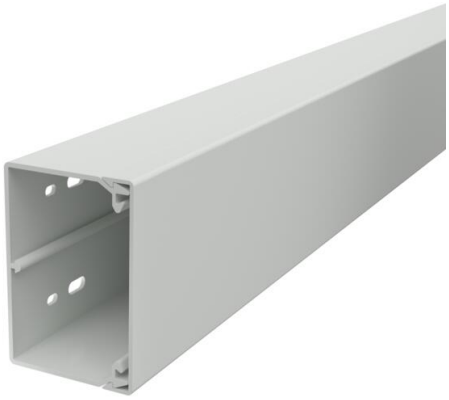

Trunking cover and base with base perforation made of halogen-free plastic including cover fixing devices.
During installation, ensure that only halogen-free accessories and fastening materials are used.

HALOGEN FREE

PC/ABS Polycarbonate/Acrylnitrile-butadiene-styrene

Master data

Item number	6175415
Type	WDKH-60090RW
Description 1	Wall trunking system
Description 2	halogen-free
Manufacturer	OBO
Dimension	60x90x2000
Colour	Pure white; RAL 9010
Material	Polycarbonate/Acrylnitrile-butadiene-styrene
Smallest sales unit	24
Unit of quantity	Metre
Weight	81.5 kg
Weight unit	kg/100 m
CO2 Footprint (GWP) Cradle-to-Gate	4,703 kg CO2e / 1 Meter

Technical data sheet

Trunking, type WDKH 60090

Item number: 6175415

Dimensions

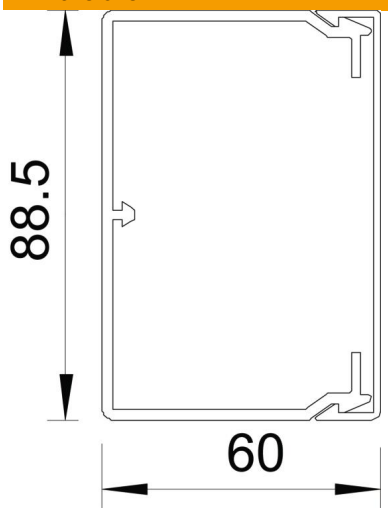

Length	2,000 mm
Width	90 mm
Height	60 mm

Technical data

Number of fixed partitions	0
Number of cables NYM 3 x 1.5 mm² Ø 10.5 mm (without socket)	19
Number of insertable partitions	0
Version, cable trunking cover	Loose
Fastening type	Base perforation
Base perforation	with base perforation
Maintain electrical functions	no
Halogen-free	yes
Cable retaining clip	yes
Duct connector	no
Delivery on a roll	no
Usable cross-section	4360 mm²
ROHS-conformant	yes
Protection rating	IP30
Protective film	no
Protection rating IK code	IK07.
Permitted temperature range, max.	90 °C
Permitted temperature range, min.	-5 °C