Technical data sheet

Trunking, type WDK-N 25040

Item number: 6150640

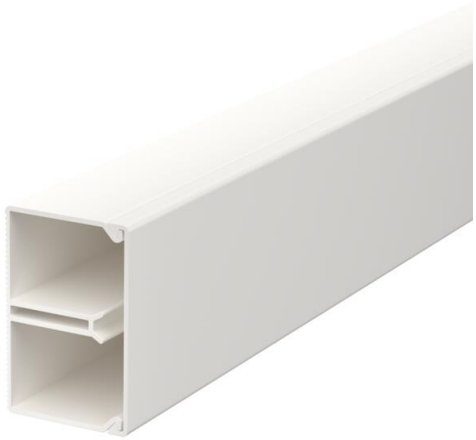

Trunking cover and base with base perforation.
A nail is used to fix the WDK trunking directly through the nail strip on the wall.

PVC Polyvinylchloride

Master data

Item number	6150640
Type	WDK-N25040RW
Description 1	Wall trunking system
Description 2	with nail strip/base perfor.
Manufacturer	OBO
Dimension	25x40x2000
Colour	Pure white; RAL 9010
Material	Polyvinylchloride
Smallest sales unit	2
Unit of quantity	Metre
Weight	36 kg
Weight unit	kg/100 m
CO2 Footprint (GWP) Cradle-to-Gate	0,7222 kg CO2e / 1 Meter

Technical data sheet

Trunking, type WDK-N 25040

Item number: 6150640

Dimensions

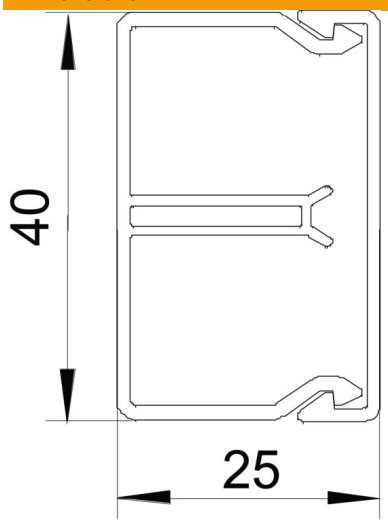

Length	2,000 mm
Width	40 mm
Height	25 mm

Technical data

Number of fixed partitions	1
Number of cables NYM 3 x 1.5 mm² Ø 10.5 mm (without socket)	4
Number of cables NYM 3 x 2.5 mm² Ø 11.5 mm (without socket)	2
Number of cables NYM 5 x 1.5 mm² Ø 12.0 mm (without socket)	2
Number of insertable partitions	0
Version, cable trunking cover	Loose
Fastening type	Nail strip and base perforation
Maintain electrical functions	no
Halogen-free	no
Cable retaining clip	no
Duct connector	no
Delivery on a roll	no
Usable cross-section	755 mm²
ROHS-conformant	yes
Protection rating	IP30
Protective film	no
Protection rating IK code	IK04
Permitted temperature range, max.	60 °C
Permitted temperature range, min.	-5 °C