# Technical data sheet

## Flat angle Signa Base FW 70110

## Item number: 6132763

Flat angle as a fitting for changing the direction of the Signa Base device installation trunking.
Cut-concealing flat angle for snapping onto the base.

PC/ABS Polycarbonate/Acrylnitrile-butadiene-styrene

### Master data

| | |
|---|---|
| Item number | 6132763 |
| Type | BRK FW70110 rws |
| Description 1 | Flat angle |
| Description 2 | SIGNA BASE 70x110 9010 |
| Manufacturer | OBO |
| Dimension | 160x160x74 |
| Colour | Pure white; RAL 9010 |
| Material | Polycarbonate/Acrylnitrile-butadiene-styrene |
| Smallest sales unit | 1 |
| Unit of quantity | Piece |
| Weight | 16.5 kg |
| Weight unit | kg/100 pc. |
| CO2 Footprint (GWP) Cradle-to-Gate | 0,9912 kg CO2e / 1 Piece |

# Technical data sheet

## Flat angle Signa Base FW 70110

## Item number: 6132763

### Dimensions

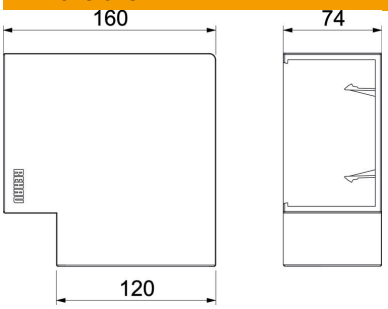


| | |
|---|---|
| Length | 160 mm |
| Width | 160 mm |
| Height | 74 mm |

### Technical data

| | |
|---|---|
| Version for | Hood fitting |
| for duct width | 110 mm |
| for trunking height | 70 mm |
| Halogen-free | yes |
| Cable retaining clip | no |
| Duct connector | no |
| Cover mounting type | Cross-over |
| Mounting perforation in base | no |
| Change of direction | Vertical, rising/falling |
| ROHS-conformant | yes |
| Protection rating | IP40 |
| Protective film | no |
| Protection rating IK code | IK07. |
| Symmetrical | yes |
| Permitted temperature range, max. | 60 °C |
| Permitted temperature range, min. | -5 °C |
| Angle range, min. | 90 mm |