Technical data sheet

Internal corner Signa Base IE 70130

Item number: 6132754

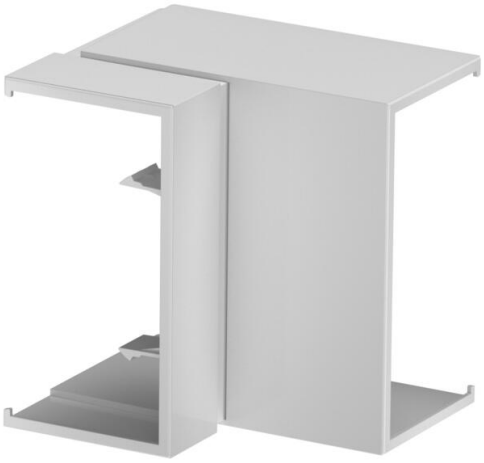

Internal corner as a fitting for changing the direction of the Signa Base device installation trunking.
Internal corner for snapping on to the base to conceal cuts. Angle adjustable.

PC/ABS Polycarbonate/Acrylnitrile-butadiene-styrene

Master data

Item number	6132754
Type	BRK IE70130 lgr
Description 1	Internal corner
Description 2	SIGNA BASE 70x130 7035
Manufacturer	OBO
Colour	Light grey; RAL 7035
Material	Polycarbonate/Acrylnitrile-butadiene-styrene
Smallest sales unit	1
Unit of quantity	Piece
Weight	14.21 kg
Weight unit	kg/100 pc.
CO2 Footprint (GWP) Cradle-to-Gate	1,0051 kg CO2e / 1 Piece

Technical data sheet

Internal corner Signa Base IE 70130

Item number: 6132754

Dimensions

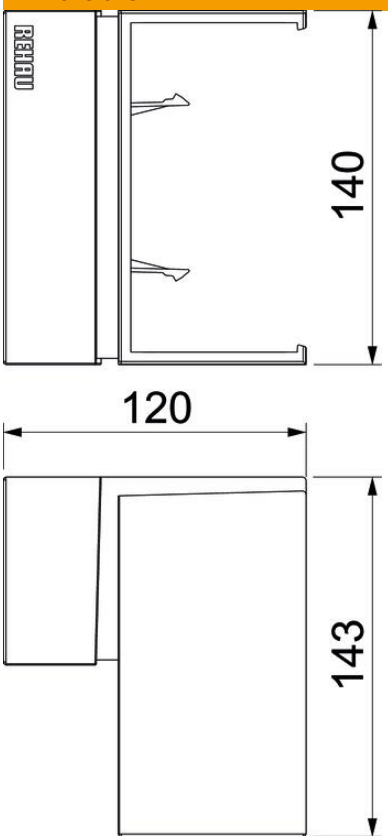

Length	120 mm
Width	143 mm
Height	140 mm

Technical data

Number of covers	0
Version for	Hood fitting
Shape	Asymmetrical
Halogen-free	yes
Cable retaining clip	no
Duct connector	no
Cover mounting type	Cross-over
Mounting perforation in base	no
ROHS-conformant	yes
Protection rating	IP40
Protective film	no
Protection rating IK code	IK07.
Permitted temperature range, max.	60 °C
Permitted temperature range, min.	-5 °C
Angle range, max.	93 mm
Angle range, min.	85 mm