Technical data sheet

Wiring trunking VF 20, flexible

Item number: 6132603

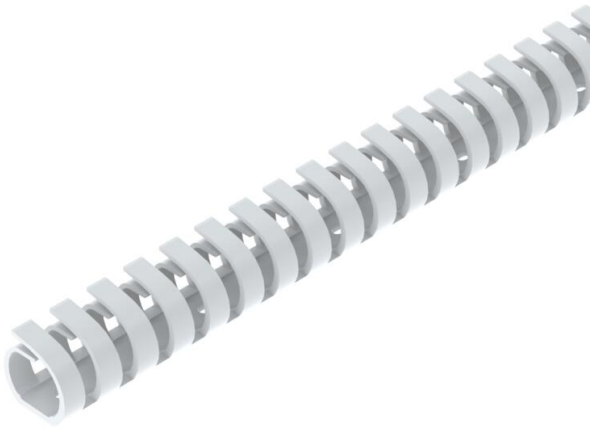

Flexible wiring duct for horizontal and vertical routing in the switchgear cabinet. Direct wall mounting using the integrated base perforation. Hardly inflammable and self-extinguishing after removal of a naked flame. The retainers in the duct base can be broken out without tools.
Tested to DIN EN 50085-2-3.
Base and cover in set.

PP Polypropylene

Master data

Item number	6132603
Type	VF 20 rws
Description 1	Slotted cable trunking system
Description 2	VF flex 20 mm 9010
Manufacturer	OBO
Colour	Pure white; RAL 9010
Material	Polypropylene
Smallest sales unit	1
Unit of quantity	Piece
Weight	2.8 kg
Weight unit	kg/100 pc.

Technical data sheet

Wiring trunking VF 20, flexible

Item number: 6132603

Dimensions

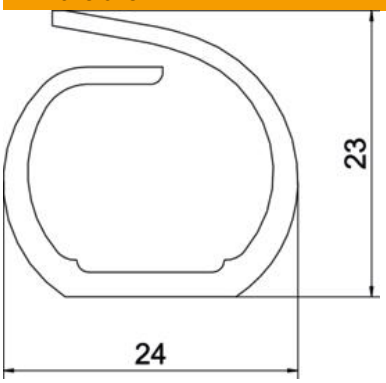

Length	500 mm
Width	24 mm
Height	24 mm

Technical data

Side wall version	Slotted
Fastening type	Base perforation
Flexible	yes
Halogen-free	yes
Creepage current-resistant	yes
With cover	no
Usable cross-section	3.6 cm²
ROHS-conformant	yes
Slot spacing	13 mm
Slot width	8 mm
Self-extinguishing	yes
Permitted temperature range, max.	60 °C
Permitted temperature range, min.	-5 °C