Technical data sheet

Device support SL ETler5070

Item number: 6132239



Empty device support for skirting trunking for the installation of standard devices in support ring and support clamp form with 60 mm fastening track.
For snapping onto the cover of the trunking system.

PVC Polyvinylchloride

Master data

Item number	6132239
Type	SL ETler5070 cws
Description 1	Mounting box
Description 2	SL empty 20x50/70 9001
Manufacturer	OBO
Colour	Cream; RAL 9001
Material	Polyvinylchloride
Smallest sales unit	1
Unit of quantity	Piece
Weight	11.8 kg
Weight unit	kg/100 pc.
CO2 Footprint (GWP) Cradle-to-Gate	0,3897 kg CO2e / 1 Piece

Technical data sheet

Device support SL ETler5070

Item number: 6132239

Dimensions

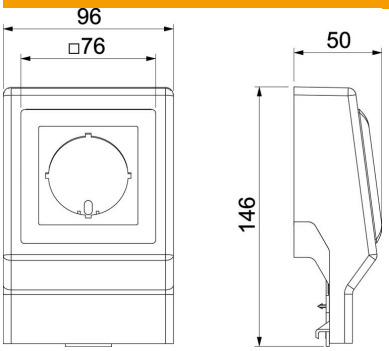

Length	50 mm
Width	96 mm
Height	146 mm

Technical data

Number of units	1
Equipment	Without
Halogen-free	no
Accessory mounting type	With central plate
Protection rating	IP40
Protection rating IK code	IK06
Permitted temperature range, max.	60 °C
Permitted temperature range, min.	-5 °C