Technical data sheet

Skirting trunking SL 2050

Item number: 6132201

SL skirting trunking for covered cable routing in internal areas. The colour of the trunking bases can vary depending on the production method.
With snap-on cover and base, with base perforation for direct wall mounting.
Change the direction with the fittings and close the trunking ends with end pieces. Device support for mounting power and data technology.
Tested according to DIN EN 50085-1 and DIN EN 50085-2-1.
Base and cover packed as a set in a box. The trunking couplings must be ordered separately.

PVC Polyvinylchloride

Master data

Item number	6132201
Type	SL 2050 cws
Description 1	Skirting trunking
Description 2	SL Set 20x50 9001
Manufacturer	OBO
Colour	Cream; RAL 9001
Material	Polyvinylchloride
Smallest sales unit	2
Unit of quantity	Metre
Weight	35.1 kg
Weight unit	kg/100 m
CO2 Footprint (GWP) Cradle-to-Gate	0,7561 kg CO2e / 1 Meter

Technical data sheet

Skirting trunking SL 2050

Item number: 6132201

Dimensions

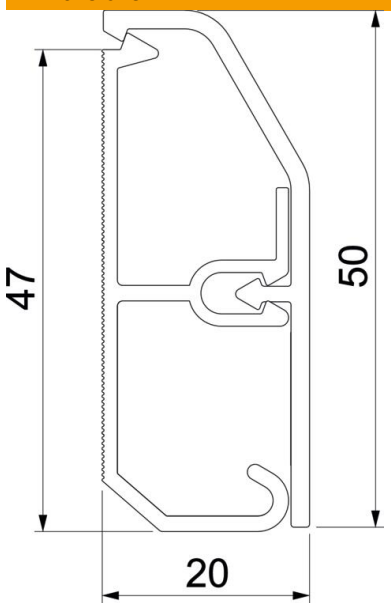

Length	2,000 mm
Width	50 mm
Height	20 mm

Technical data

Number of fixed partitions	1
Decoration	Without
Cover sealing lip	Without
Halogen-free	no
With carpet strip	no
Mounting perforation in base	yes
Usable cross-section	580 mm²
ROHS-conformant	yes
Protection rating	IP40
Protective film	no
Protection rating IK code	IK06
Permitted temperature range, max.	60 °C
Permitted temperature range, min.	-5 °C