Technical data sheet

Single frame BRK

Item number: 6121102

Frame for Modul 45 locking connection (to accept the support plate for Keystone modules).

PC/ ABS Polycarbonate/Acrylnitrile-butadiene-styrene

Master data

Item number	6121102
Type	BRK CF1 M45 cws
Description 1	Single frame
Description 2	SIGNA Modul 45 9001
Manufacturer	OBO
Dimension	66x80x28
Colour	Cream; RAL 9001
Material	Polycarbonate/Acrylnitrile-butadiene-styrene
Smallest sales unit	1
Unit of quantity	Piece
Weight	1.75 kg
Weight unit	kg/100 pc.
CO2 Footprint (GWP) Cradle-to-Gate	0,1111kg CO2e / 1 Piece

Technical data sheet

Single frame BRK

Item number: 6121102

Dimensions

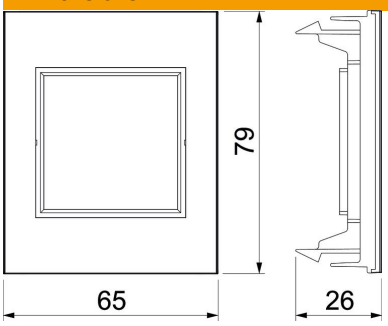

Width	66 mm
Height	80 mm

Technical data

Number of units	1
Number of units, horizontal	1
Anzahl der Einheiten vertikal	0
Surface version	Matt
Fastening type	Clamp fastening
Flush-mounted version	no
Suitable for built-in installations	no
Suitable for device installation ducts	yes
Suitable for underfloor duct socket	no
Suitable for flush-mounted installations	no
Halogen-free	yes
Hinged cover	no
Mounting direction	Horizontal and vertical
ROHS-conformant	yes
Protection rating	IP20
Text field/inscription field	no
Transparent	no
Concealed	no
With mounting frame	no
Diameter opening	0