Technical data sheet

Socket 0°, Connect 80, protective contact, double

Item number: 6120442

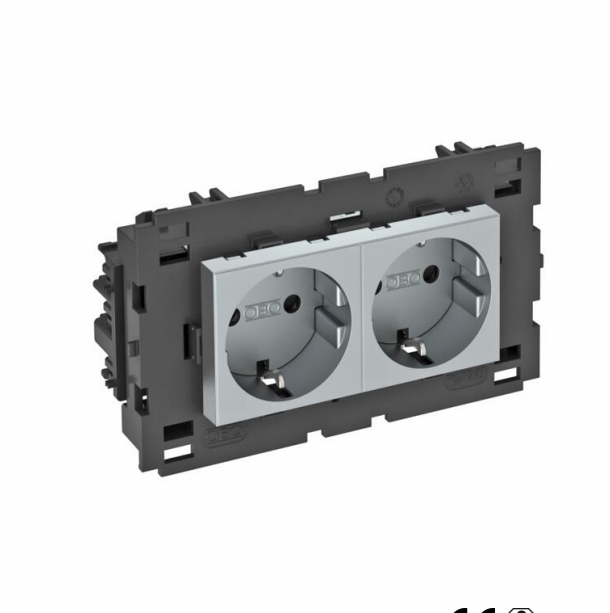

Protective contact socket with connection to side, double 0°, with increased touch protection, with screwless terminals, 2-pin, 16 A, 250 V~, with connection terminals to IEC 60884-1, suitable for the installation in Rapid 80 device installation trunking systems.
For installation in Rapid 45 trunking, device installation trunking, service poles, underfloor systems and desk boxes.

PC Polycarbonate

Master data

Item number	6120442
Type	STD-D0C8 AL2
Description 1	Socket 0°, double
Description 2	protective contact, Connect 80
Manufacturer	OBO
Dimension	250V, 10/16A
Colour	Aluminium painted
Material	Polycarbonate
Smallest sales unit	1
Unit of quantity	Piece
Weight	13 kg
Weight unit	kg/100 pc.
CO2 Footprint (GWP) Cradle-to-Gate	0,6767 kg CO2e / 1 Piece

Technical data sheet

Socket 0°, Connect 80, protective contact, double

Item number: 6120442

Dimensions

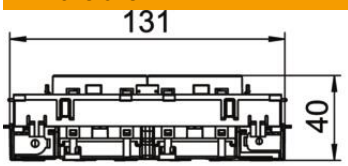

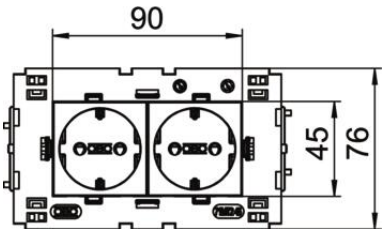

Width	131 mm
Height	76 mm

Technical data

Cover	Central plate
Closable	no
Connection type	Screwless terminal
Number of units	2
Number of modules (for modular construction)	0
Number of switchable sockets	0
Number of poles	2
Printed label/coding	Without printing
Version for	double 0°
Surface version	Matt
Version for	SCHUKO
Ejection mechanism	no
Fastening type	Lock
Labelling panel	no
Operating temperature, max.	40 °C
Operating temperature, min.	-5 °C
increased touch protection	yes
Error current protection	no
For more difficult conditions (according to VDE)	no
Power reserve	no
Halogen-free	yes
Insulated installation	no
Hinged cover	no
Coding	no
Warning light	no
With on/off switch	no
With fine-wire fuse	no
With functional lighting	no
With orientation lighting	no
Mounting type	Device installation duct
Nominal voltage	250 V
Nominal current	16 A

Technical data sheet

Socket 0°, Connect 80, protective contact, double

Item number: 6120442

Technical data

ROHS-conformant	yes
Protection rating	Other
Special power supply	Without special power supply
Socket version	Protective contact
Socket angle	0°
Depth	42 mm
Transparent	no
Rotated central insert	no
Surge protection	no