Technical data sheet

Cover frame AR50, for accessory mounting box 71GD6/11, single

Item number: 6119396

Front locking cover frame for devices with 50 mm central plate, single, without labelling panel for horizontal and vertical device installation, for mounting on accessory mounting box 71GD6, 71GD11 or in mounting support 71MTD.
For installation in Rapid 80 device installation trunking and ISS service poles.

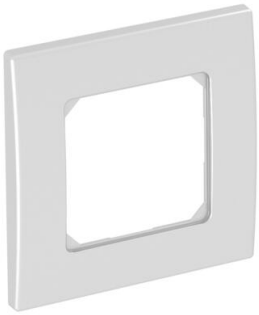

PC Polycarbonate

Master data

Item number	6119396
Type	AR50-F1 AL
Description 1	Cover frame
Description 2	50 mm central insert, single
Manufacturer	OBO
Dimension	84x84mm
Colour	Aluminium painted
Material	Polycarbonate
Smallest sales unit	1
Unit of quantity	Piece
Weight	1.62 kg
Weight unit	kg/100 pc.
CO2 Footprint (GWP) Cradle-to-Gate	0,0212 kg CO2e / 1 Piece

Technical data sheet

Cover frame AR50, for accessory mounting box 71GD6/11, single

Item number: 6119396

Dimensions

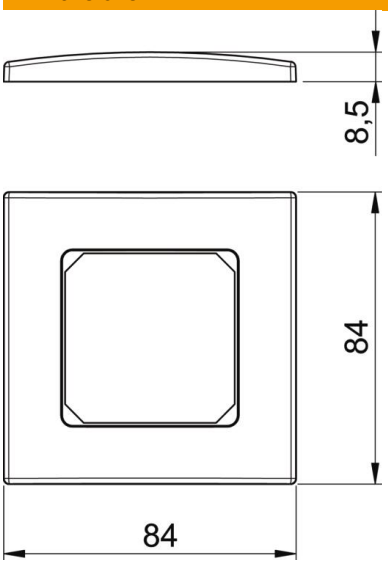

Width	84 mm
Height	84 mm

Technical data

Number of units	1
Number of units, horizontal	1
Anzahl der Einheiten vertikal	1
Surface version	Matt
Fastening type	Clamp fastening
Suitable for built-in installations	yes
Suitable for device installation ducts	yes
Suitable for underfloor duct socket	no
Suitable for flush-mounted installations	no
Halogen-free	yes
Hinged cover	no
Mounting direction	Horizontal and vertical
ROHS-conformant	yes
Protection rating	Other
Text field/inscription field	no
Depth	8.5 mm
Transparent	no
With mounting frame	no
Diameter opening	0