Technical data sheet

Modul 45connect® connector part adapter, white

Item number: 6117197

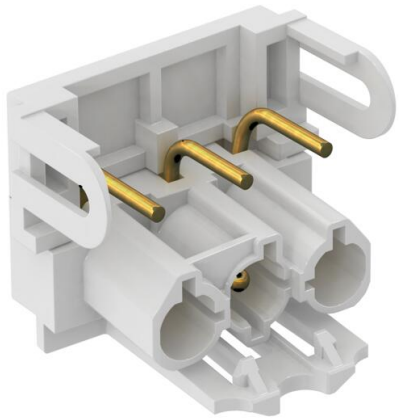

Connector part adapter, U-shaped, for connection to an STD-D0C / STD-D3C or STD-F0C / STD-F3C socket from the side, for VL extension cable with Wieland connector GST 18i 3p.

PA Polyamide

Master data

Item number	6117197
Type	STA-SKS SU1 W
Description 1	Connect. part adapter,U-shaped
Description 2	GST 18i 3p, Modul 45connect
Manufacturer	OBO
Colour	White
Material	Polyamide
Smallest sales unit	10
Unit of quantity	Piece
Weight	1.19 kg
Weight unit	kg/100 pc.
CO2 Footprint (GWP) Cradle-to-Gate	0,0544 kg CO2e / 1 Piece

Technical data sheet

Modul 45connect® connector part adapter, white

Item number: 6117197

Dimensions

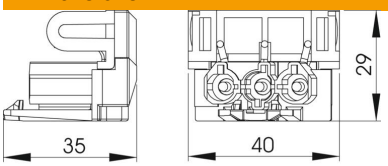

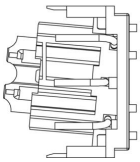

Length	35 mm
Width	40 mm
Height	29 mm

Technical data

Type of locking	Integrated in plug connector
Version of the device connection	Connector
Built-in variants	Installation part/plug connection
Colour of the coding/contact insert	White
Colour of the separate adapter	White
Thread connection dimension	No threaded connection
Halogen-free	yes
Contact material	CuZn
Mechanical encoding	yes
Angle of inclination, max.	0 °
Angle of inclination, min.	0 °
Nominal voltage	250 V
Nominal current	16 A
Surface treatment of the contacts	Tin-plated
Pin labelling	L, N, PE
Pole number	3
ROHS-conformant	Exempt
Protection rating	IP20
Direction of insertion	Straight
Plug-in system	GST18