Technical data sheet

Stabiliser plate

Item number: 6115995



Stabiliser plate for the stabilisation of the system opening of the GAD design device installation trunking series. The panel is placed in the trunking base and supports the acceptance of covers and ensures a secure hold of the devices.

CE UK CA

St	Steel
FS	Strip galvanised

Master data

Item number	6115995
Type	GAD SB
Description 1	Stabiliser plate
Description 2	for Design duct
Manufacturer	OBO
Dimension	62x58x2
Colour	zinc
Material	Steel
Surface	Strip galvanised
Surface standard	DIN EN 10346
Smallest sales unit	10
Unit of quantity	Piece
Weight	2 kg
Weight unit	kg/100 pc.
CO2 Footprint (GWP) Cradle-to-Gate	0,1385 kg CO2e / 1 Piece

Technical data sheet

Stabiliser plate

Item number: 6115995

Dimensions

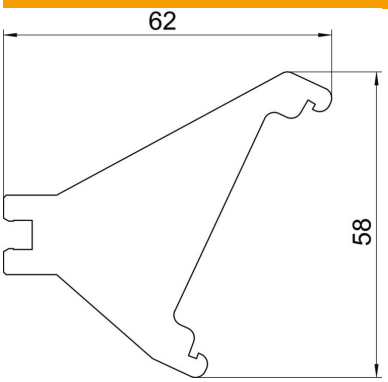

Length	62 mm
Width	58 mm
Height	2 mm

Technical data

Accessories	yes
Spare part	no
Magnetic	no