Technical data sheet

Device installation trunking Rapid 45-2, trunking width 100, trunking height 53
Item number: 6113002

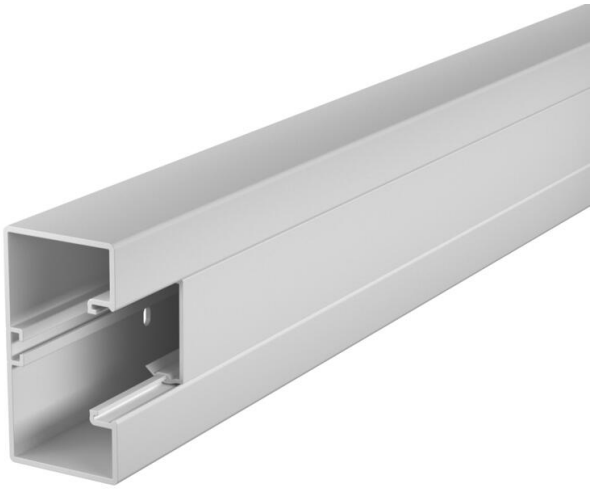

Trunking base and cover with base perforation for direct wall mounting.

PVC Polyvinylchloride

Master data

Item number	6113002
Type	GK-53100LGR
Description 1	Device installation trunking
Description 2	Rapid 45-2, 1-compartment
Manufacturer	OBO
Dimension	53x100x2000
Colour	Light grey; RAL 7035
Material	Polyvinylchloride
Smallest sales unit	2
Unit of quantity	Metre
Weight	130.3 kg
Weight unit	kg/100 m
CO2 Footprint (GWP) Cradle-to-Gate	2,656 kg CO2e / 1 Meter

Technical data sheet

Device installation trunking Rapid 45-2, trunking width 100, trunking height 53
Item number: 6113002

Dimensions

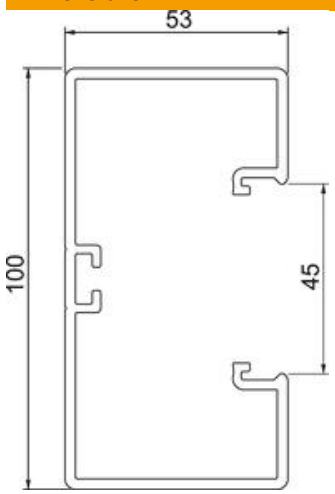

Length	2,000 mm
Width	100 mm
Height	53 mm

Technical data

Number of covers	1
Number of insertable partitions	1
Rear panel version (inner side)	Continuous C profile
Rectangular shape	yes
Base perforation	With base perforation
Halogen-free	no
Cable retaining clip	no
Duct connector	no
Cover mounting type	Internal
Mounting perforation in base	yes
Usable cross-section	4400 mm²
Cover supplied	yes
Cover width	45 mm
Cover width 2	0 mm
Cover width 3	0 mm
ROHS-conformant	yes
Protection rating	IP40
Protective film	yes
Protection rating IK code	IK08
Symmetrical	yes
Permitted temperature range, max.	60 °C
Permitted temperature range, min.	-15 °C