Technical data sheet

XLR connection, 1 module, straight outlet, 3-pin socket, as screw connection, black-grey
Item number: 6105252

Multimedia support with one XLR connection socket, straight cable outlet, without labelling panel, 3-pin XLR socket with screw connection. Support plate with locking fastening, suitable for horizontal and vertical installation in the system environment.

PC Polycarbonate

Master data

Item number	6105252
Type	MTG-X3F S SWGR1
Description 1	Multimedia support, XLR, 3-pin
Description 2	socket with screw connection
Manufacturer	OBO
Dimension	45x45mm
Colour	Black-grey; RAL 7021
Material	Polycarbonate
Smallest sales unit	1
Unit of quantity	Piece
Weight	3.5 kg
Weight unit	kg/100 pc.
CO2 Footprint (GWP) Cradle-to-Gate	0,1531 kg CO2e / 1 Piece

Technical data sheet

XLR connection, 1 module, straight outlet, 3-pin socket, as screw connection, black-grey
Item number: 6105252

Dimensions

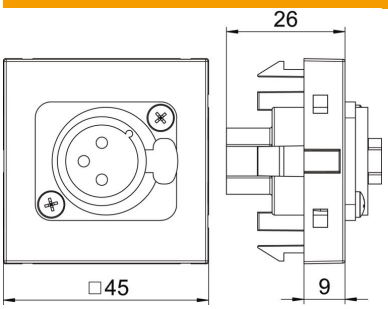

Width	45 mm
Height	45 mm

Technical data

Surface version	Matt
Fastening type	Lock
Labelling panel	Without labelling panel
Halogen-free	no
Hinged cover	no
Lamp-wire connector	no
With printed label	no
With dust protection	no
ROHS-conformant	Exempt
Protection rating	IP20
Depth	9 mm
Support ring	yes
Transparent	no
Use	XLR
Strain relief option	no
Combination	Basic element with central cover plate
Outlet direction	Straight