Technical data sheet

HDMI connection, 1 module, slanting outlet, as screw connection
Item number: 6104814

Multimedia support with one HDMI connection socket, slanting cable outlet, with labelling panel, HDMI socket with screw connection. Support plate with locking fastening, suitable for horizontal and vertical installation in the system environment.

PC Polycarbonate

Master data

Item number	6104814
Type	MTS-HD S RW1
Description 1	Multimedia support, HDMI
Description 2	socket with screw connection
Manufacturer	OBO
Dimension	45x45mm
Colour	Pure white; RAL 9010
Material	Polycarbonate
Smallest sales unit	1
Unit of quantity	Piece
Weight	3.4 kg
Weight unit	kg/100 pc.
CO2 Footprint (GWP) Cradle-to-Gate	0,4947 kg CO2e / 1 Piece

Technical data sheet

HDMI connection, 1 module, slanting outlet, as screw connection
Item number: 6104814

Dimensions

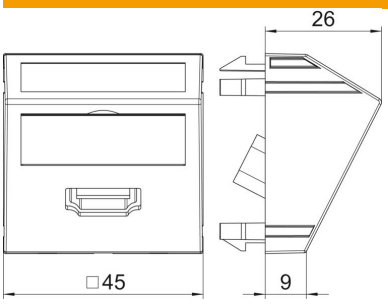

Width	45 mm
Height	45 mm

Technical data

Number of units	1
Surface version	Matt
Fastening type	Lock
Labelling panel	With labelling panel
Halogen-free	yes
Hinged cover	no
Lamp-wire connector	no
With printed label	no
With dust protection	no
ROHS-conformant	yes
Protection rating	IP20
Depth	26 mm
Support ring	no
Transparent	no
Use	HDMI
Strain relief option	no
Combination	Basic element with central cover plate