Technical data sheet

Multimedia support for DVI plug connector, 1 module, slanting outlet
Item number: 6104796

Multimedia support for a DVI plug connector, slanting cable outlet, with labelling panel, without plug connector. Support plate with locking fastening, suitable for horizontal and vertical installation in the system environment.

PC Polycarbonate

Master data

Item number	6104796
Type	MTS-DV O AL1
Description 1	Multimedia support, DVI
Description 2	without connection socket
Manufacturer	OBO
Dimension	45x45mm
Colour	Aluminium painted
Material	Polycarbonate
Smallest sales unit	1
Unit of quantity	Piece
Weight	0.9 kg
Weight unit	kg/100 pc.
CO2 Footprint (GWP) Cradle-to-Gate	0,0304 kg CO2e / 1 Piece

Technical data sheet

Multimedia support for DVI plug connector, 1 module, slanting outlet
Item number: 6104796

Dimensions

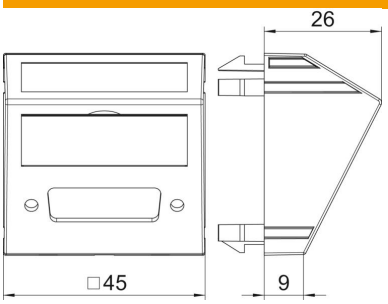

Width	45 mm
Height	45 mm

Technical data

Number of units	1
Surface version	Matt
Fastening type	Lock
Labelling panel	With labelling panel
Halogen-free	yes
Hinged cover	no
Lamp-wire connector	no
With printed label	no
With dust protection	no
ROHS-conformant	yes
Protection rating	IP20
Depth	26 mm
Support ring	no
Transparent	no
Use	Miscellaneous
Strain relief option	no
Combination	Basic element with central cover plate