Technical data sheet

D-Sub9 connection, 1 module, slanting outlet, with connection cable
Item number: 6104697

Multimedia support with one D-Sub9 connection socket, slanting cable outlet, with labelling panel, short D-Sub9 connection cable (RS232), socket-socket version. Support with locking fastening, suitable for horizontal and vertical installation in the system environment.

PC Polycarbonate

Master data

Item number	6104697
Type	MTS-DB9 F SWGR1
Description 1	Multimedia support, D-Sub9
Description 2	with cable, socket-socket
Manufacturer	OBO
Dimension	45x45mm
Colour	Black-grey; RAL 7021
Material	Polycarbonate
Smallest sales unit	1
Unit of quantity	Piece
Weight	5.4 kg
Weight unit	kg/100 pc.
CO2 Footprint (GWP) Cradle-to-Gate	0,0963 kg CO2e / 1 Piece

Technical data sheet

D-Sub9 connection, 1 module, slanting outlet, with connection cable
Item number: 6104697

Dimensions

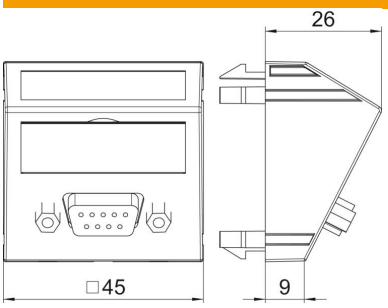

Width	45 mm
Height	45 mm

Technical data

Number of units	1
Surface version	Matt
Fastening type	Lock
Labelling panel	With labelling panel
Halogen-free	yes
Hinged cover	no
Lamp-wire connector	no
With printed label	no
With dust protection	no
ROHS-conformant	yes
Protection rating	IP20
Depth	26 mm
Support ring	no
Transparent	no
Use	D-Sub miniature
Strain relief option	no
Combination	Basic element with central cover plate
Outlet direction	Sloping