Technical data sheet

Cable ladder LG 60, 6 m VS A4

Item number: 6101208

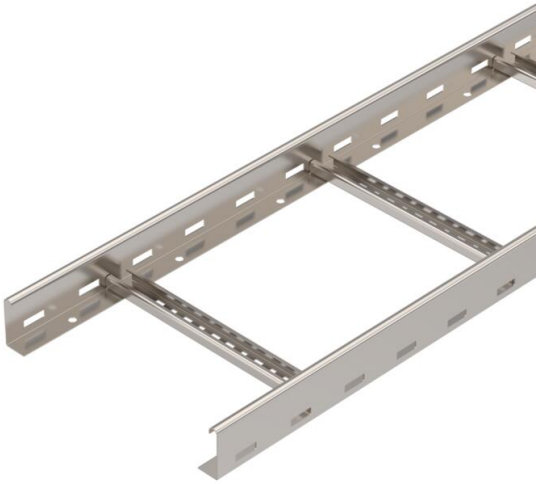

Cable ladder with perforated side rail of side height 60 mm with riveted C profile frames, open in an upwards direction (VS version).
The cable ladder is shipped folded up.

Matching clamp clip, type 2056 H foot, type BS-H...
Magnetic shield insulation without cover 10 dB, with cover 15 dB.

A4 Stainless steel

2B Bright, treated

Master data

Item number	6101208
Type	LG 630 VS6 A4
Description 1	Cable ladder
Description 2	perforated, with VS rung
Manufacturer	OBO
Dimension	60x300x6000
Colour	stainless steel
Material	Stainless steel 1.4571
Surface	Bright, treated
Surface standard	
Smallest sales unit	6
Unit of quantity	Metre
Weight	288.733 kg
Weight unit	kg/100 m
CO2 Footprint (GWP) Cradle-to-Gate	14,8477 kg CO2e / 1 Meter

Technical data sheet

Cable ladder LG 60, 6 m VS A4

Item number: 6101208

Dimensions

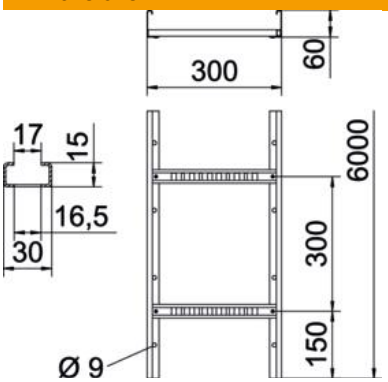

Dimension	60x300x6000
Length	6,000 mm
Width	300 mm
Height	60 mm
Dimension B	300 mm
Rung slot dimension	16.50

Technical data

Version of the rungs	Profile perforated
Side rail version	Flat profile
Fastening of rung	Blind riveted
Mounting system fastening type	Floor Ceiling Wall
Maintain electrical functions	no
Usable cross-section	148 cm²
Usable cross-section	14800 mm²
ROHS-conformant	yes
Rustproof steel, pickled	no
Side perforation	yes
Rung distance	300 mm
Wide-span version	no
Rail thickness	1.5 mm

Technical data sheet

Cable ladder LG 60, 6 m VS A4

Item number: 6101208

Loads

Insertable support spacings, min.	1.5 m
Insertable support spacings, max.	5 m
Support spacing 1.5 m	3.1 kN/m
Support spacing 2.0 m	2.25 kN/m
Support spacing 2.5 m	1.5 kN/m
Support spacing 3.0 m	1.1 kN/m
Support spacing 3.5 m	0.75 kN/m
Support spacing 4.0 m	0.45 kN/m
Support spacing 4.5 m	0.3 kN/m
Support spacing 5.0 m	0.15 kN/m

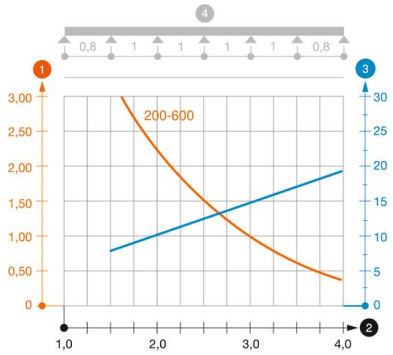

Load diagram, cable ladder, type LG 60 VS

1. Permitted cable tray/ladder load in kN/m without man load
2. Support width in m
3. Rail bend in mm at permitted kN/m
4. Load scheme during testing

— Load curve with cable tray/ladder width in mm

— Strut bend curve according to support width