Technical data sheet

Corner connector 60 DD

Item number: 6069410

Corner connector for cable trays with side height 60 mm.
Fastening materials should be ordered separately.

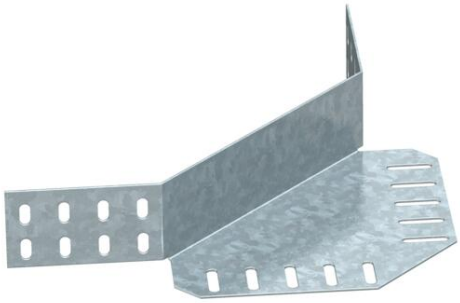

St Steel

DD Strip galvanised zinc/aluminium, Double Dip

Master data

Item number	6069410
Type	REV 60 DD
Description 1	Corner connector
Description 2	for cable tray
Manufacturer	OBO
Colour	zinc
Material	Steel
Surface	Strip galvanised zinc/aluminium, Double Dip
Surface standard	DIN EN 10346
Smallest sales unit	1
Unit of quantity	Piece
Weight	32 kg
Weight unit	kg/100 pc.
CO2 Footprint (GWP) Cradle-to-Gate	1,4978 kg CO2e / 1 Piece

Technical data sheet

Corner connector 60 DD

Item number: 6069410

Dimensions

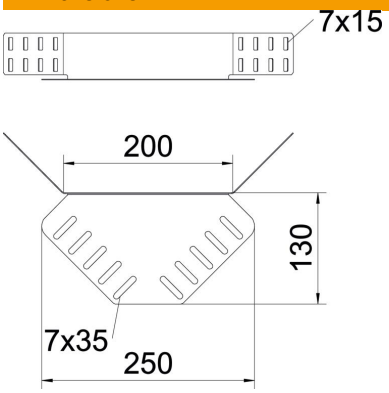

Dimension	240 x 130
Length	240 mm
Width	200 mm
Height	55 mm
Height	2 in
Plate thickness	1.25 mm

Technical data

Version for	Corner connector
Maintain electrical functions	no
Suitable for mesh cable tray	no
Suitable for cable ladder	no
Suitable for cable tray	yes
Suitable for cable tray system height	60 mm
Adjustable connector, horizontal	no
Articulated connector, vertical	no
ROHS-conformant	yes
Rustproof steel, pickled	no
Connection type	Screw connector
Wide-span version	no