Technical data sheet

BKRS 100 cable tray, shortened FS

Item number: 6061897

Cable tray fitting with shortened length, for creation the of straight sections on walkable cable trays.

CE

St	Steel
FS	Strip galvanised

Master data

Item number	6061897
Type	BKRS 1030 10 FS
Description 1	Cable tray BKRS
Description 2	walkable
Manufacturer	OBO
Dimension	100x300x1000
Colour	zinc
Material	Steel
Surface	Strip galvanised
Surface standard	DIN EN 10346
Smallest sales unit	1
Unit of quantity	Piece
Weight	758.5 kg
Weight unit	kg/100 pc.
CO2 Footprint (GWP) Cradle-to-Gate	31,6017 kg CO2e / 1 Piece

Technical data sheet

BKRS 100 cable tray, shortened FS

Item number: 6061897

Dimensions

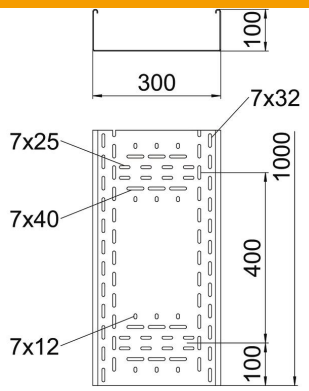

Length	1,000 mm
Width	300 mm
Width	300 in
Height	100 mm
Plate thickness	2 mm
Dimension B	300 mm
Dimension H	100 mm

Technical data

Connector version	Without connectors
Mounting system fastening type	Floor
Walkable	yes
Maintain electrical functions	no
With cover	no
Mounting perforation in base	yes
NATO hole pattern	no
Usable cross-section	296 cm²
Usable cross-section	29600 mm²
ROHS-conformant	yes
Rustproof steel, pickled	no
Side perforation	no
Wide-span version	no
Type of connector, cable support system	Screwed