# Technical data sheet

## SKS-Magic® 60 FT cable tray

## Item number: 6059483

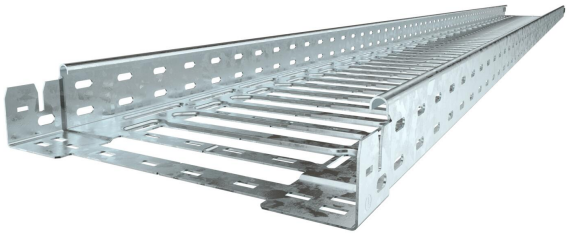

Cable tray with integrated quick fastening system. The usable length of the cable tray is 3,000 mm.

The cable tray has continuous side perforations of 7 x 20 mm for the installation of additional connection and mounting components.

From a cable tray width of 200 mm with 30% hole surface, suitable for use under sprinkler systems according to VdS guideline 2092.
Continuous equipotential bonding is guaranteed without additional components.
The cable tray is tested for the mounting above suspended fire protection ceilings (tray widths 100–600 mm).

The mounting version and the mounting parameters correspond to the valid certificates.

You can find additional information in our fire protection systems catalogue.

St Steel

FT Hot-dip galvanised

### Master data

| | |
|---|---|
| Item number | 6059483 |
| Type | SKSM 650 FT |
| Description 1 | Cable tray SKSM |
| Description 2 | perforated, quick connector |
| Manufacturer | OBO |
| Dimension | 60x500x3050 |
| Colour | zinc |
| Material | Steel |
| Surface | Hot-dip galvanised |
| Surface standard | DIN EN ISO 1461 |
| Smallest sales unit | 3 |
| Unit of quantity | Metre |
| Weight | 538.295 kg |
| Weight unit | kg/100 m |
| CO2 Footprint (GWP) Cradle-to-Gate | 15,9612 kg CO2e / 1 Meter |

# Technical data sheet

## SKS-Magic® 60 FT cable tray

## Item number: 6059483

### Dimensions

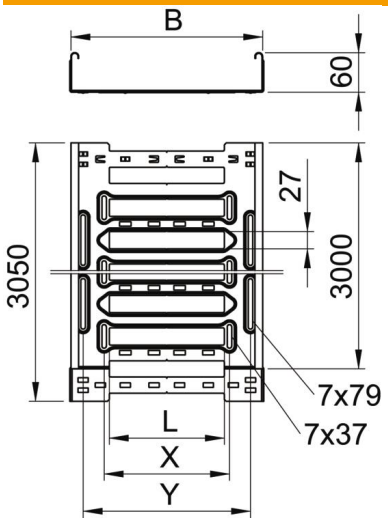


| | |
|---|---|
| Length | 3,050 mm |
| Width | 500 mm |
| Height | 60 mm |
| Plate thickness | 1.5 mm |
| Dimension B | 500 mm |
| Dimension L | 380 mm |
| Dimension x | 396 mm |
| Dimension y | 462 mm |

### Technical data

| | |
|---|---|
| Connector version | Integrated connector |
| Mounting system fastening type | Floor Ceiling Wall |
| Walkable | no |
| Maintain electrical functions | no |
| With cover | no |
| Mounting perforation in base | yes |
| NATO hole pattern | no |
| Usable cross-section | 298 cm² |
| Usable cross-section | 29800 mm² |
| ROHS-conformant | yes |
| Rustproof steel, pickled | no |
| Side perforation | yes |
| Wide-span version | no |
| Magnetic shield insulation without cover | 20 dB |
| Magnetic shield insulation with cover | 50 dB |
| Load test type according to IEC 61537 | Type II |
| Type of connector, cable support system | Click fastening |

# Technical data sheet

## SKS-Magic® 60 FT cable tray

## Item number: 6059483

### Loads

| | |
|---|---|
| Insertable support spacings, min. | 1.5 m |
| Insertable support spacings, max. | 3 m |
| Support spacing 1.5 m | 2.6 kN/m |
| Support spacing 2.0 m | 1.8 kN/m |
| Support spacing 2.5 m | 1.2 kN/m |
| Support spacing 3.0 m | 0.8 kN/m |

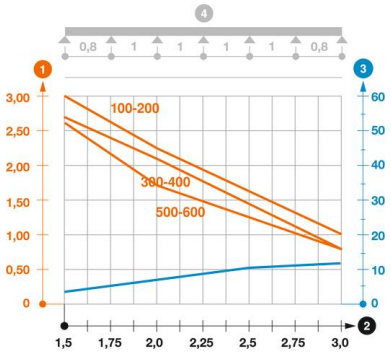


**Load diagram, cable tray, type SKSM 60**

1. Permitted cable tray/ladder load in kN/m without man load
2. Support width in m
3. Rail bend in mm at permitted kN/m
4. Load scheme during testing

— Load curve with cable tray/ladder width in mm

— Strut bend curve according to support width