# Technical data sheet

## Cable tray MKS-Magic® 110 FS

## Item number: 6059168

Cable tray with integrated quick fastening system. The usable length of the cable tray is 3,000 mm.

The cable tray has continuous side perforations of 7 x 20 mm for the installation of additional connection and mounting components.

From a cable tray width of 200 mm with 30% hole surface, suitable for use under sprinkler systems according to VdS guideline 2092.
Continuous equipotential bonding is guaranteed without additional components.

| | |
|---|---|
| St | Steel |
| FS | Strip galvanised |

### Master data

| | |
|---|---|
| Item number | 6059168 |
| Type | MKSM 160 FS |
| Description 1 | Cable tray MKSM |
| Description 2 | perforated, quick connector |
| Manufacturer | OBO |
| Dimension | 110x600x3050 |
| Colour | zinc |
| Material | Steel |
| Surface | Strip galvanised |
| Surface standard | DIN EN 10346 |
| Smallest sales unit | 3 |
| Unit of quantity | Metre |
| Weight | 444.983 kg |
| Weight unit | kg/100 m |
| CO2 Footprint (GWP) Cradle-to-Gate | 15,1368 kg CO2e / 1 Meter |

# Technical data sheet

## Cable tray MKS-Magic® 110 FS

## Item number: 6059168

### Dimensions

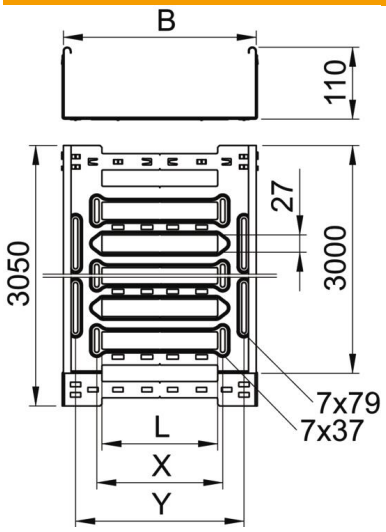


| | |
|---|---|
| Length | 3,050 mm |
| Width | 600 mm |
| Height | 110 mm |
| Plate thickness | 1 mm |
| Dimension B | 600 mm |
| Dimension L | 480 mm |
| Dimension x | 496 mm |
| Dimension y | 562 mm |

### Technical data

| | |
|---|---|
| Connector version | Integrated connector |
| Mounting system fastening type | Floor Ceiling Wall |
| Walkable | no |
| Maintain electrical functions | no |
| With cover | no |
| Mounting perforation in base | yes |
| NATO hole pattern | no |
| Usable cross-section | 655 cm² |
| Usable cross-section | 65500 mm² |
| ROHS-conformant | yes |
| Rustproof steel, pickled | no |
| Side perforation | yes |
| Wide-span version | no |
| Magnetic shield insulation without cover | 20 dB |
| Magnetic shield insulation with cover | 50 dB |
| Load test type according to IEC 61537 | Type II |
| Usable length | 3000 mm |
| Type of connector, cable support system | Click fastening |

### Loads

| | |
|---|---|
| Insertable support spacings, min. | 1.5 m |
| Insertable support spacings, max. | 3 m |
| NEMA load class | 8A |
| Support spacing 1.5 m | 1.8 kN/m |
| Support spacing 2.0 m | 1.3 kN/m |
| Support spacing 2.5 m | 0.92 kN/m |
| Support spacing 3.0 m | 0.65 kN/m |

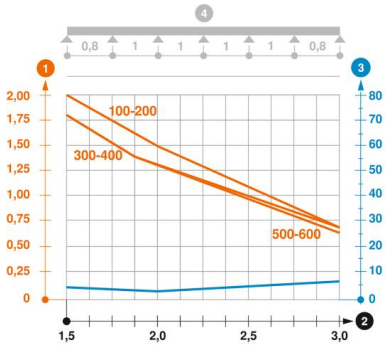


**Load diagram, cable tray, type MKSM 110**

1. Permitted cable tray/ladder load in kN/m without man load
2. Support width in m
3. Rail bend in mm at permitted kN/m
4. Load scheme during testing

Load curve with cable tray/ladder width in mm

Strut bend curve according to support width