Technical data sheet

Cable tray RKS-Magic® 60, pure white

Item number: 6048259

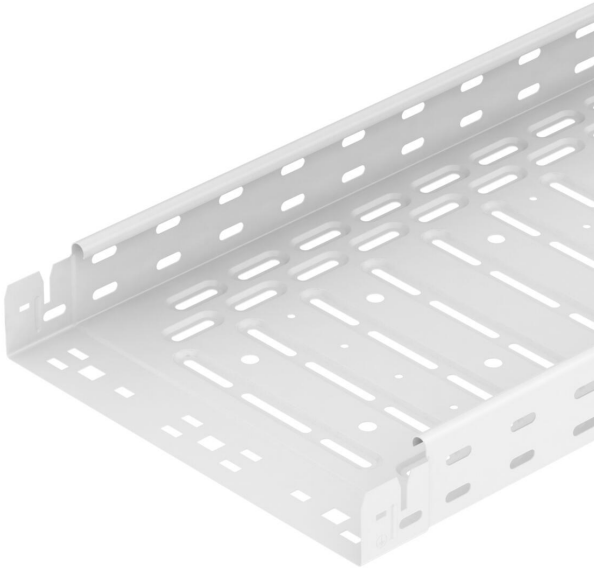

Cable tray with integrated quick fastening system. Continuous side perforations of 7 x 20 mm for the installation of additional connection and mounting components. With 11 mm perforation in the base for direct threaded rod suspension. Usable length 3,000 mm.
The cable tray's surface is strip-galvanised and visible areas are powder-coated in white (RAL 9010).

Powder-coated fittings in white (RAL 9010) and other colours on request.
Magnetic shield insulation without cover 20 dB, with cover 50 dB.

St Steel

PE 50S PES50 - Polyester/epoxy/visual surface coated

Master data

Item number	6048259
Type	RKSM 640 FSK RW
Description 1	Cable tray RKSM
Description 2	Magic, quick connector
Manufacturer	OBO
Dimension	60x400x3050
Colour	Pure white; RAL 9010
Material	Steel
Surface	PES50 - Polyester/epoxy/visual surface coated
Surface standard	
Smallest sales unit	6
Unit of quantity	Metre
Weight	356 kg
Weight unit	kg/100 m
CO2 Footprint (GWP) Cradle-to-Gate	8,4276 kg CO2e / 1 Meter

Technical data sheet

Cable tray RKS-Magic® 60, pure white

Item number: 6048259

Dimensions

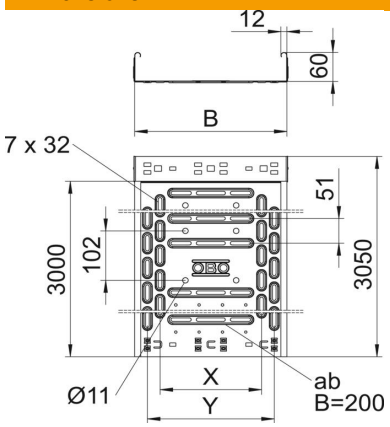

Length	3,050 mm
Width	400 mm
Height	60 mm
Plate thickness	0.9 mm
Dimension B	400 mm
Dimension t	200 mm
Dimension x	300 mm
Dimension y	350 mm

Technical data

Connector version	Integrated connector
Mounting system fastening type	Floor Ceiling Wall
Walkable	no
Base perforation	1
Maintain electrical functions	yes
With cover	no
Mounting perforation in base	yes
NATO hole pattern	no
Usable cross-section	238 cm²
Usable cross-section	23800 mm²
ROHS-conformant	yes
Rustproof steel, pickled	no
Side perforation	yes
Wide-span version	no
Load test type according to IEC 61537	Type II
Usable length	3000 mm
Type of connector, cable support system	Click fastening

Technical data sheet

Cable tray RKS-Magic® 60, pure white

Item number: 6048259

Loads

Insertable support spacings, min.	1 m
Insertable support spacings, max.	2.5 m
NEMA load class	8AA
Support spacing 1.0 m	2.1 kN/m
Support spacing 1.5 m	1.35 kN/m
Support spacing 2.0 m	0.9 kN/m
Support spacing 2.5 m	0.6 kN/m

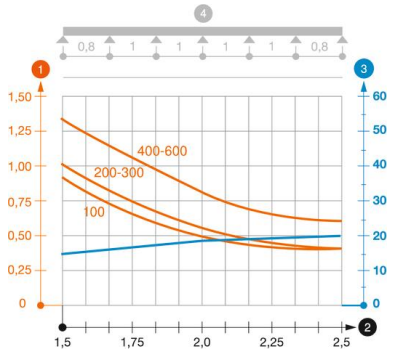

Load diagram, cable tray, type RKSM 60

1. Permitted cable tray/ladder load in kN/m without man load
2. Support width in m
3. Rail bend in mm at permitted kN/m
4. Load scheme during testing

— Load curve with cable tray/ladder width in mm

— Strut bend curve according to support width