Technical data sheet

Cable tray RKS-Magic® 60 A4

Item number: 6047738

Cable tray with integrated quick fastening system. The usable length of the cable tray is 3,000 mm.

The cable tray has continuous side perforations of 7 x 20 mm for the installation of additional connection and mounting components.

The perforation for direct threaded rod suspension has a diameter of 11 mm. Continuous equipotential bonding is guaranteed without additional components. Magnetic shield insulation without cover 20 dB, with cover 50 dB.

A4	Stainless steel
2B	Bright, treated

Master data

Item number	6047738
Type	RKSM 660 A4
Description 1	Cable tray RKSM
Description 2	Magic, quick connector
Manufacturer	OBO
Dimension	60x600x3050
Colour	stainless steel
Material	Stainless steel 1.4571
Surface Surface standard	Bright, treated
Smallest sales unit	3
Unit of quantity	Metre
Weight	491.148 kg
Weight unit	kg/100 m
CO2 Footprint (GWP) Cradle-to-Gate	25,6436 kg CO2e / 1 Meter

Technical data sheet

Cable tray RKS-Magic® 60 A4

Item number: 6047738

Dimensions

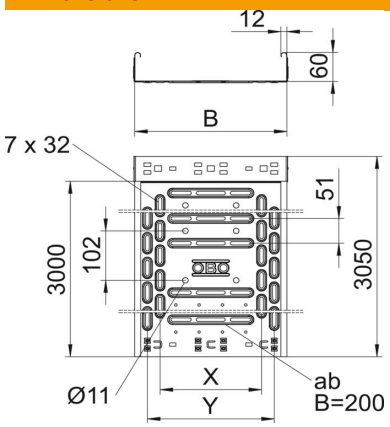

Length	3,050 mm
Width	600 mm
Height	60 mm
Plate thickness	0.9 mm
Dimension B	600 mm
Dimension t	400 mm
Dimension x	450 mm
Dimension y	550 mm

Technical data

Connector version	Integrated connector
Mounting system fastening type	Floor Ceiling Wall
Walkable	no
Base perforation	1
Maintain electrical functions	no
With cover	no
Mounting perforation in base	yes
NATO hole pattern	no
Usable cross-section	358 cm²
Usable cross-section	35800 mm²
ROHS-conformant	yes
Rustproof steel, pickled	no
Side perforation	yes
Wide-span version	no
Magnetic shield insulation without cover	20 dB
Magnetic shield insulation with cover	50 dB
Load test type according to IEC 61537	Type II
Usable length	3000 mm
Type of connector, cable support system	Click fastening

Loads

Insertable support spacings, min.	1 m
Insertable support spacings, max.	2.5 m
Support spacing 1.0 m	2.1 kN/m
Support spacing 1.5 m	1.35 kN/m
Support spacing 2.0 m	0.9 kN/m
Support spacing 2.5 m	0.6 kN/m

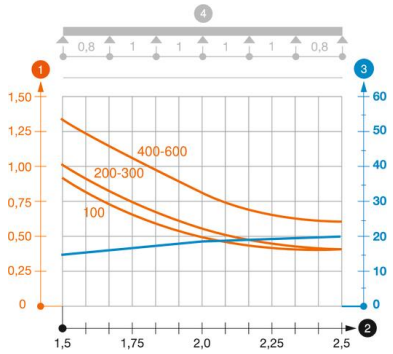

Load diagram, cable tray, type RKSM 60

1. Permitted cable tray/ladder load in kN/m without man load
2. Support width in m
3. Rail bend in mm at permitted kN/m
4. Load scheme during testing

— Load curve with cable tray/ladder width in mm

— Strut bend curve according to support width