Technical data sheet

T piece 110 FS

Item number: 6038308

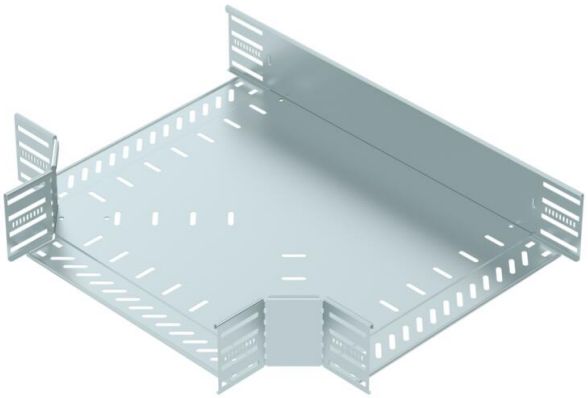

T piece for the creation of a horizontal branch, fitting for lock and screw-on cable trays of side height 110 mm. Screwless mounting with double clamps or screw connection with FRS truss-head screws and M6 combination nuts. Can be used in indoor areas. Fastening material must be ordered separately.

NEW

St	Steel
FS	Strip galvanised

Master data

Item number	6038308
Type	RT 140 FS
Description 1	T piece
Description 2	for cable tray, horizontal
Manufacturer	OBO
Dimension	110x400
Colour	zinc
Material	Steel
Surface	Strip galvanised
Surface standard	DIN EN 10346
Smallest sales unit	1
Unit of quantity	Piece
Weight	346.6 kg
Weight unit	kg/100 pc.
CO2 Footprint (GWP) Cradle-to-Gate	11,8845 kg CO2e / 1 Piece

Technical data sheet

T piece 110 FS

Item number: 6038308

Dimensions

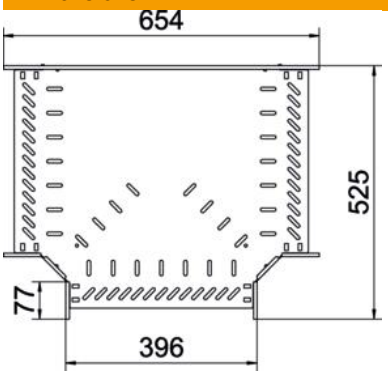

Width	400 mm
Height	110 mm
Plate thickness	1 mm
Dimension B	400 mm

Technical data

Connector version	Integrated connector
Maintain electrical functions	no
NATO hole pattern	no
ROHS-conformant	yes
Rustproof steel, pickled	no
Permitted temperature range, max.	120 °C
Permitted temperature range, min.	-20 °C
Wide-span version	no
Type of connector, cable support system	screwed/clamped
Recommended quantity of bolts	33 St.
Rail thickness	1.25 mm