Technical data sheet

T piece 60/300 A2

Item number: 6038164

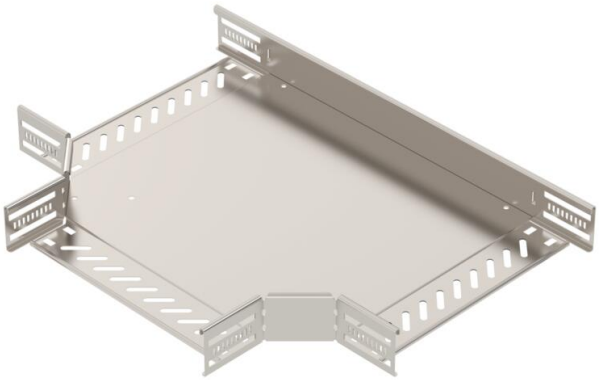

T piece for the creation of a horizontal branch, fitting for lock and screw-on cable trays of side height 60 mm. Screwless mounting with double clamps or screw connection with FRS truss-head screws and M6 combination nuts. Can be used indoors and outdoors. Fastening material must be ordered separately.

NEW

A2	Stainless steel
2B	Bright, treated

Master data

Item number	6038164
Type	RT 630 A2
Description 1	T piece
Description 2	for cable tray, horizontal
Manufacturer	OBO
Dimension	60x300
Colour	stainless steel
Material	Stainless steel 1.4301
Surface	Bright, treated
Surface standard	
Smallest sales unit	1
Unit of quantity	Piece
Weight	208.8 kg
Weight unit	kg/100 pc.
CO2 Footprint (GWP) Cradle-to-Gate	18,0625 kg CO2e / 1 Piece

Technical data sheet

T piece 60/300 A2

Item number: 6038164

Dimensions

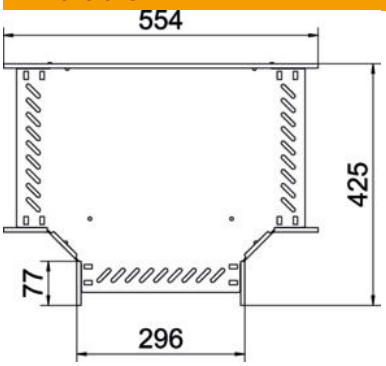

Width	300 mm
Height	60 mm
Plate thickness	1 mm
Dimension B	300 mm

Technical data

Connector version	Integrated connector
Maintain electrical functions	yes
NATO hole pattern	no
ROHS-conformant	yes
Rustproof steel, pickled	no
Permitted temperature range, max.	120 °C
Permitted temperature range, min.	-20 °C
Wide-span version	no
Type of connector, cable support system	screwed/clamped
Recommended quantity of bolts	21 St.
Rail thickness	1.25 mm