Technical data sheet

Cover, 90° bend A4

Item number: 6036994

Cover for 90° bend fitting for lockable and screw-on cable trays in indoor and outdoor areas, to protect cables against damage and soiling. Fastening with pre-mounted sash lock and through attachment of the section cover. Suitable for all side heights.
The cover can be used with fittings of all side heights.

NEW

A4 Stainless steel

2B Bright, treated

Master data

Item number	6036994
Type	RBD 90 400 A4
Description 1	Cover
Description 2	for 90° bend
Manufacturer	OBO
Dimension	B400mm
Colour	stainless steel
Material	Stainless steel 1.4571
Surface	Bright, treated
Surface standard	
Smallest sales unit	1
Unit of quantity	Piece
Weight	140 kg
Weight unit	kg/100 pc.
CO2 Footprint (GWP) Cradle-to-Gate	15,2717 kg CO2e / 1 Piece

Technical data sheet

Cover, 90° bend A4

Item number: 6036994

Dimensions

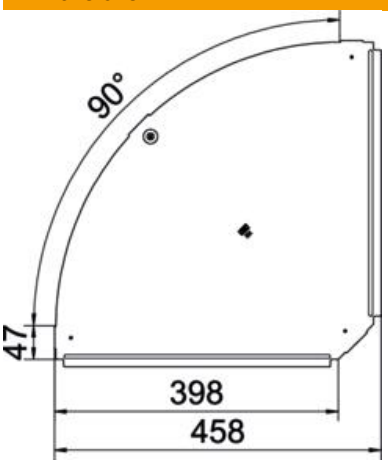

Length	458 mm
Width	400 mm
Plate thickness	1 mm
Dimension B	400 mm

Technical data

Bend (angle)	90°
Number of turn buckles	1 St.
Fastening type	Sash lock
Maintain electrical functions	no
Suitable for mesh cable tray	no
Suitable for cable ladder	no
Suitable for cable tray	yes
Change of direction	Horizontal
ROHS-conformant	yes
Rustproof steel, pickled	no
Hinged	no
Permitted temperature range, max.	120 °C
Permitted temperature range, min.	-20 °C