Technical data sheet

Cover, 90° bend A4

Item number: 6036992

Cover for 90° bend fitting for lockable and screw-on cable trays in indoor and outdoor areas, to protect cables against damage and soiling. Fastening with pre-mounted sash lock and through attachment of the section cover. Suitable for all side heights.
The cover can be used with fittings of all side heights.

NEW

A4	Stainless steel
2B	Bright, treated

Master data

Item number	6036992
Type	RBD 90 300 A4
Description 1	Cover
Description 2	for 90° bend
Manufacturer	OBO
Dimension	B300mm
Colour	stainless steel
Material	Stainless steel 1.4571
Surface	Bright, treated
Surface standard	
Smallest sales unit	1
Unit of quantity	Piece
Weight	65 kg
Weight unit	kg/100 pc.
CO2 Footprint (GWP) Cradle-to-Gate	6,2553 kg CO2e / 1 Piece

Technical data sheet

Cover, 90° bend A4

Item number: 6036992

Dimensions

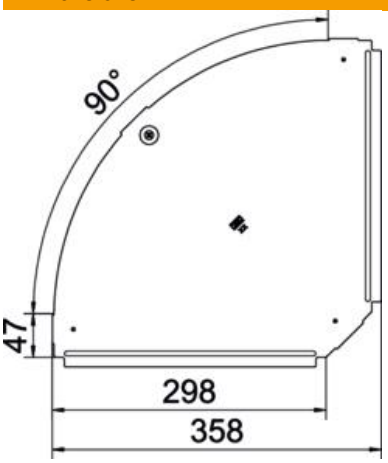

Length	358 mm
Width	300 mm
Plate thickness	0.75 mm
Dimension B	300 mm

Technical data

Bend (angle)	90°
Number of turn buckles	1 St.
Fastening type	Sash lock
Maintain electrical functions	no
Suitable for mesh cable tray	no
Suitable for cable ladder	no
Suitable for cable tray	yes
Change of direction	Horizontal
ROHS-conformant	yes
Rustproof steel, pickled	no
Hinged	no
Permitted temperature range, max.	120 °C
Permitted temperature range, min.	-20 °C