Technical data sheet

Cover, 90° bend DD

Item number: 6036962

Cover for 90° bend fitting for lockable and screw-on cable trays in indoor and outdoor areas, to protect cables against damage and soiling. Fastening with pre-mounted sash lock and through attachment of the section cover. Suitable for all side heights.
The cover can be used with fittings of all side heights.

NEW

St	Steel
DD	Strip galvanised zinc/aluminium, Double Dip

Master data

Item number	6036962
Type	RBD 90 600 DD
Description 1	Cover
Description 2	for 90° bend
Manufacturer	OBO
Dimension	B600mm
Colour	zinc
Material	Steel
Surface	Strip galvanised zinc/aluminium, Double Dip
Surface standard	DIN EN 10346
Smallest sales unit	1
Unit of quantity	Piece
Weight	280 kg
Weight unit	kg/100 pc.
CO2 Footprint (GWP) Cradle-to-Gate	11,7076 kg CO2e / 1 Piece

Technical data sheet

Cover, 90° bend DD

Item number: 6036962

Dimensions

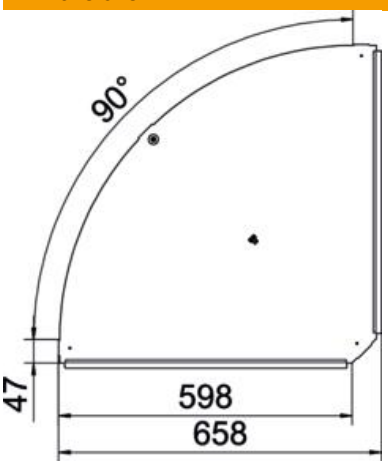

Width	600 mm
Plate thickness	1 mm
Dimension B	600 mm

Technical data

Bend (angle)	90°
Number of turn buckles	1 St.
Fastening type	Sash lock
Maintain electrical functions	no
Suitable for mesh cable tray	no
Suitable for cable ladder	no
Suitable for cable tray	yes
Change of direction	Horizontal
ROHS-conformant	yes
Rustproof steel, pickled	no
Hinged	no
Permitted temperature range, max.	120 °C
Permitted temperature range, min.	-20 °C