Technical data sheet

Cover, 90° bend FS

Item number: 6036908

Cover for 90° bend fitting for lockable and screw-on cable trays in indoor areas, to protect cables against damage and soiling. Fastening with pre-mounted sash lock and through attachment of the section cover. Suitable for all side heights. The cover can be used with fittings of all side heights.

NEW

St Steel

FS Strip galvanised

Master data

Item number	6036908
Type	RBD 90 400 FS
Description 1	Cover
Description 2	for 90° bend
Manufacturer	OBO
Dimension	B400mm
Colour	zinc
Material	Steel
Surface	Strip galvanised
Surface standard	DIN EN 10346
Smallest sales unit	1
Unit of quantity	Piece
Weight	138 kg
Weight unit	kg/100 pc.
CO2 Footprint (GWP) Cradle-to-Gate	5,8718 kg CO2e / 1 Piece

Technical data sheet

Cover, 90° bend FS

Item number: 6036908

Dimensions

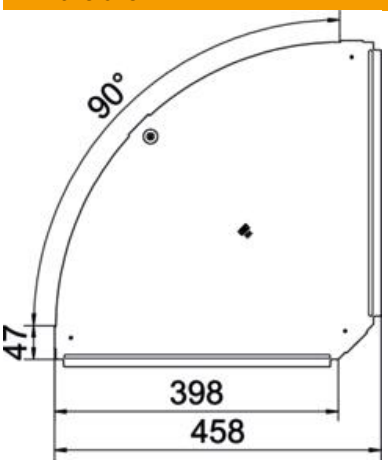

Width	400 mm
Plate thickness	1 mm
Dimension B	400 mm

Technical data

Bend (angle)	90°
Number of turn buckles	1 St.
Fastening type	Sash lock
Maintain electrical functions	no
Suitable for mesh cable tray	no
Suitable for cable ladder	no
Suitable for cable tray	yes
Change of direction	Horizontal
ROHS-conformant	yes
Rustproof steel, pickled	no
Hinged	no
Permitted temperature range, max.	120 °C
Permitted temperature range, min.	-20 °C