# Technical data sheet

## 90° bend 85 FS

## Item number: 6036710

90° bend for the creation of a horizontal branch, fitting for lock and screw-on cable trays of side height 85 mm. Screwless mounting with double clamps or screw connection with FRS truss-head screws and M6 combination nuts. Can be used in indoor areas. Fastening material must be ordered separately.

NEW

| | |
|---|---|
| St | Steel |
| FS | Strip galvanised |

### Master data

| | |
|---|---|
| Item number | 6036710 |
| Type | RB 90 860 FS |
| Description 1 | 90° bend |
| Description 2 | for cable tray, horizontal |
| Manufacturer | OBO |
| Dimension | 85x600 |
| Colour | zinc |
| Material | Steel |
| Surface | Strip galvanised |
| Surface standard | DIN EN 10346 |
| Smallest sales unit | 1 |
| Unit of quantity | Piece |
| Weight | 456.3 kg |
| Weight unit | kg/100 pc. |
| CO2 Footprint (GWP) Cradle-to-Gate | 14,4922 kg CO2e / 1 Piece |

# Technical data sheet

## 90° bend 85 FS

## Item number: 6036710

### Dimensions

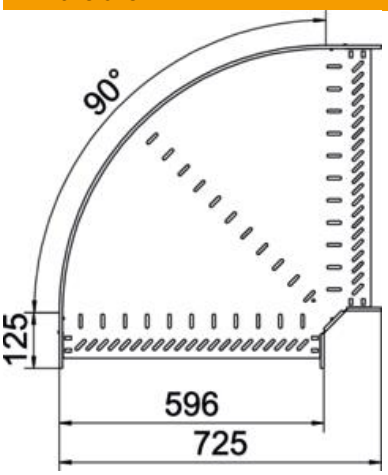


| | |
|---|---|
| Width | 600 mm |
| Height | 85 mm |
| Plate thickness | 1 mm |
| Dimension B | 600 mm |
| Dimension R | 50 mm |

### Technical data

| | |
|---|---|
| Bend (angle) | 90° |
| Connector version | Integrated connector |
| Type | Bend, rigid |
| Maintain electrical functions | no |
| Material thickness, floor plate | 1 mm |
| With cover | no |
| Mounting perforation in base | yes |
| NATO hole pattern | no |
| Change of direction | Horizontal |
| ROHS-conformant | yes |
| Rustproof steel, pickled | no |
| Side perforation | yes |
| Permitted temperature range, max. | 120 °C |
| Permitted temperature range, min. | -20 °C |
| Wide-span version | no |
| Type of connector, cable support system | screwed/clamped |
| Recommended quantity of bolts | 20 St. |
| Rail thickness | 1.25 mm |