Technical data sheet

90° bend 60 A4

Item number: 6036662

90° bend for the creation of a horizontal branch, fitting for lock and screw-on cable trays of side height 60 mm. Screwless mounting with double clamps or screw connection with FRS truss-head screws and M6 combination nuts. Can be used indoors and outdoors. Fastening material must be ordered separately.

NEW

A4	Stainless steel
2B	Bright, treated

Master data

Item number	6036662
Type	RB 90 660 A4
Description 1	90° bend
Description 2	for cable tray, horizontal
Manufacturer	OBO
Dimension	60x600
Colour	stainless steel
Material	Stainless steel 1.4571
Surface	Bright, treated
Surface standard	
Smallest sales unit	1
Unit of quantity	Piece
Weight	418.7 kg
Weight unit	kg/100 pc.
CO2 Footprint (GWP) Cradle-to-Gate	48,1341 kg CO2e / 1 Piece

Technical data sheet

90° bend 60 A4

Item number: 6036662

Dimensions

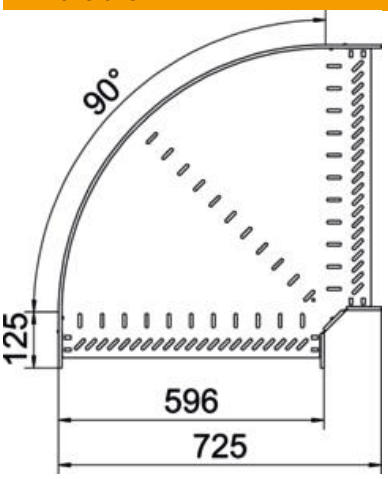

Width	600 mm
Height	60 mm
Plate thickness	1 mm
Dimension B	600 mm

Technical data

Bend (angle)	90°
Connector version	Integrated connector
Type	Bend, rigid
Maintain electrical functions	no
Material thickness, floor plate	1 mm
With cover	no
Mounting perforation in base	yes
NATO hole pattern	no
Change of direction	Horizontal
ROHS-conformant	yes
Rustproof steel, pickled	no
Side perforation	yes
Permitted temperature range, max.	120 °C
Permitted temperature range, min.	-20 °C
Wide-span version	no
Type of connector, cable support system	Screwed
Recommended quantity of bolts	16 St.
Rail thickness	1.25 mm