Technical data sheet

90° bend 35 FT

Item number: 6036512

90° bend for the creation of a horizontal branch, fitting for lock and screw-on cable trays of side height 35 mm. Screw connection with FRS truss-head screws and M6 combination nuts. Can be used indoors and outdoors. Fastening material must be ordered separately.

NEW

St Steel

FT Hot-dip galvanised

Master data

Item number	6036512
Type	RB 90 320 FT
Description 1	90° bend
Description 2	for cable tray, horizontal
Manufacturer	OBO
Dimension	35x200
Colour	zinc
Material	Steel
Surface	Hot-dip galvanised
Surface standard	DIN EN ISO 1461
Smallest sales unit	1
Unit of quantity	Piece
Weight	81.6 kg
Weight unit	kg/100 pc.
CO2 Footprint (GWP) Cradle-to-Gate	2,4288 kg CO2e / 1 Piece

Technical data sheet

90° bend 35 FT

Item number: 6036512

Dimensions

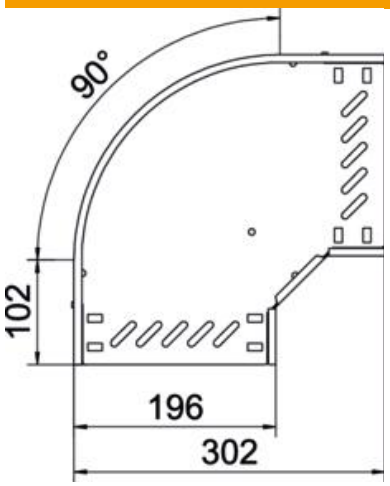

Width	200 mm
Height	35 mm
Plate thickness	0.8 mm
Dimension B	200 mm

Technical data

Bend (angle)	90°
Connector version	Integrated connector
Type	Bend, rigid
Maintain electrical functions	no
Material thickness, floor plate	0.8 mm
With cover	no
Mounting perforation in base	yes
NATO hole pattern	no
Change of direction	Horizontal
ROHS-conformant	yes
Rustproof steel, pickled	no
Side perforation	yes
Permitted temperature range, max.	120 °C
Permitted temperature range, min.	-20 °C
Wide-span version	no
Type of connector, cable support system	Screwed
Recommended quantity of bolts	8 St.
Rail thickness	1.25 mm