Technical data sheet

Cover, 45° bend DD

Item number: 6036456

Cover for 45° bend fitting for lockable and screw-on cable trays in indoor and outdoor areas, to protect cables against damage and soiling. Fastening with pre-mounted sash lock and through attachment of the section cover. Suitable for all side heights.
The cover can be used with fittings of all side heights.

NEW

St Steel

DD Strip galvanised zinc/aluminium, Double Dip

Master data

Item number	6036456
Type	RBD 45 300 DD
Description 1	Cover
Description 2	for 45° bend
Manufacturer	OBO
Dimension	B300mm
Colour	zinc
Material	Steel
Surface	Strip galvanised zinc/aluminium, Double Dip
Surface standard	DIN EN 10346
Smallest sales unit	1
Unit of quantity	Piece
Weight	41 kg
Weight unit	kg/100 pc.
CO2 Footprint (GWP) Cradle-to-Gate	2,2805 kg CO2e / 1 Piece

Technical data sheet

Cover, 45° bend DD

Item number: 6036456

Dimensions

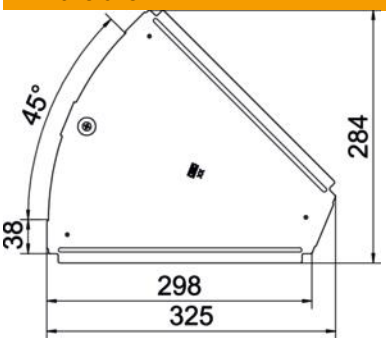

Length	325 mm
Width	300 mm
Plate thickness	0.75 mm
Dimension B	300 mm

Technical data

Bend (angle)	45°
Number of turn buckles	1 St.
Fastening type	Sash lock
Maintain electrical functions	no
Suitable for mesh cable tray	no
Suitable for cable ladder	no
Suitable for cable tray	yes
Change of direction	Horizontal
ROHS-conformant	yes
Rustproof steel, pickled	no
Hinged	no
Permitted temperature range, max.	120 °C
Permitted temperature range, min.	-20 °C