Technical data sheet

Cover, 45° bend FS

Item number: 6036408

Cover for 45° bend fitting for lockable and screw-on cable trays in indoor areas, to protect cables against damage and soiling. Fastening with pre-mounted sash lock and through attachment of the section cover. Suitable for all side heights. The cover can be used with fittings of all side heights.

NEW

St	Steel
FS	Strip galvanised

Master data

Item number	6036408
Type	RBD 45 400 FS
Description 1	Cover
Description 2	for 45° bend
Manufacturer	OBO
Dimension	B400mm
Colour	zinc
Material	Steel
Surface	Strip galvanised
Surface standard	DIN EN 10346
Smallest sales unit	1
Unit of quantity	Piece
Weight	83 kg
Weight unit	kg/100 pc.
CO2 Footprint (GWP) Cradle-to-Gate	3,1973 kg CO2e / 1 Piece

Technical data sheet

Cover, 45° bend FS

Item number: 6036408

Dimensions

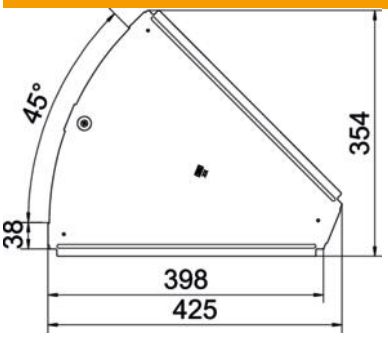

Length	425 mm
Width	400 mm
Plate thickness	1 mm
Dimension B	400 mm

Technical data

Bend (angle)	45°
Number of turn buckles	1 St.
Fastening type	Sash lock
Maintain electrical functions	no
Suitable for mesh cable tray	no
Suitable for cable ladder	no
Suitable for cable tray	yes
Change of direction	Horizontal
ROHS-conformant	yes
Rustproof steel, pickled	no
Hinged	no
Permitted temperature range, max.	120 °C
Permitted temperature range, min.	-20 °C