Technical data sheet

45° bend 85 FS

Item number: 6036210

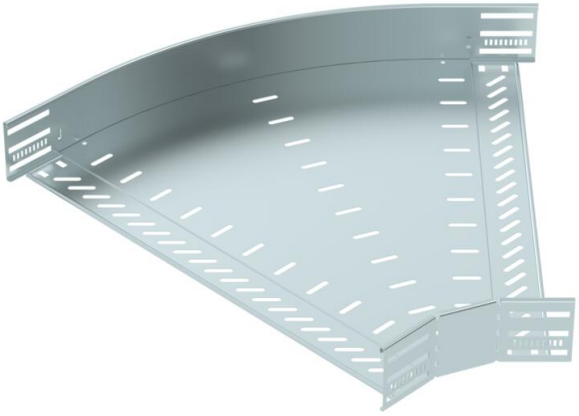

45° bend for the creation of a horizontal branch, fitting for lock and screw-on cable trays of side height 85 mm. Screwless mounting with double clamps or screw connection with FRS truss-head screws and M6 combination nuts. Can be used in indoor areas. Fastening material must be ordered separately.

NEW

St	Steel
FS	Strip galvanised

Master data

Item number	6036210
Type	RB 45 860 FS
Description 1	45° bend
Description 2	for cable tray, horizontal
Manufacturer	OBO
Dimension	85x600
Colour	zinc
Material	Steel
Surface	Strip galvanised
Surface standard	DIN EN 10346
Smallest sales unit	1
Unit of quantity	Piece
Weight	283.1 kg
Weight unit	kg/100 pc.
CO2 Footprint (GWP) Cradle-to-Gate	9,4061 kg CO2e / 1 Piece

Technical data sheet

45° bend 85 FS

Item number: 6036210

Dimensions

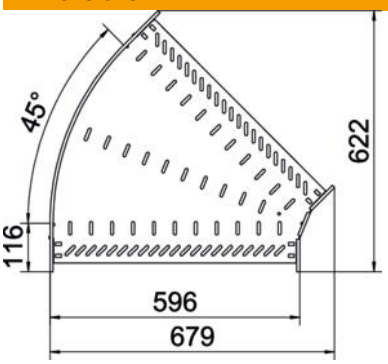

Width	600 mm
Height	85 mm
Plate thickness	1 mm
Dimension B	600 mm

Technical data

Bend (angle)	45°
Connector version	Integrated connector
Type	Bend, rigid
Maintain electrical functions	no
Material thickness, floor plate	1 mm
With cover	no
Mounting perforation in base	yes
NATO hole pattern	no
Change of direction	Horizontal
ROHS-conformant	yes
Rustproof steel, pickled	no
Side perforation	yes
Permitted temperature range, max.	120 °C
Permitted temperature range, min.	-20 °C
Wide-span version	no
Type of connector, cable support system	screwed/clamped
Recommended quantity of bolts	20 St.
Rail thickness	1.25 mm