Technical data sheet

Trunking, type WDK 60060

Item number: 6027105

Trunking cover and base with base perforation.
Four cover clips included
Lid clamp can be moved along the entire length of the trunking.

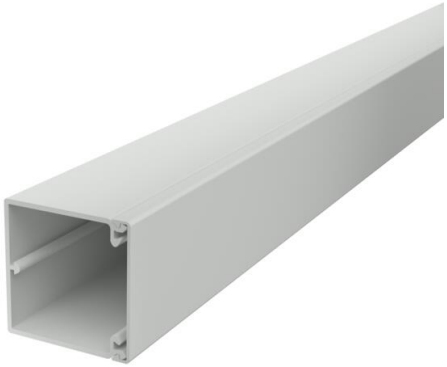

PVC Polyvinylchloride

Master data

Item number	6027105
Type	WDK60060LGR
Description 1	Wall trunking system
Description 2	with base perforation
Manufacturer	OBO
Dimension	60x60x2000
Colour	Light grey; RAL 7035
Material	Polyvinylchloride
Smallest sales unit	32
Unit of quantity	Metre
Weight	81.6 kg
Weight unit	kg/100 m
CO2 Footprint (GWP) Cradle-to-Gate	1,6097 kg CO2e / 1 Meter

Technical data sheet

Trunking, type WDK 60060

Item number: 6027105

Dimensions

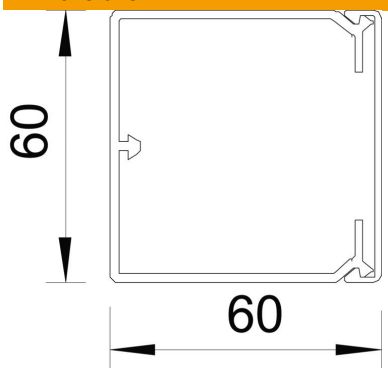

Length	2,000 mm
Width	60 mm
Height	60 mm

Technical data

Number of fixed partitions	0
Number of cables NYM 3 x 1.5 mm² Ø 10.5 mm (without socket)	16
Number of cables NYM 3 x 2.5 mm² Ø 11.5 mm (without socket)	13
Number of cables NYM 5 x 1.5 mm² Ø 12.0 mm (without socket)	12
Number of insertable partitions	1
Version, cable trunking cover	Loose
Fastening type	Base perforation
Maintain electrical functions	no
Halogen-free	no
Cable retaining clip	yes
Duct connector	no
Delivery on a roll	no
Usable cross-section	2863 mm²
ROHS-conformant	yes
Protection rating	IP30
Protective film	no
Protection rating IK code	IK04
Permitted temperature range, max.	60 °C
Permitted temperature range, min.	-5 °C