Technical data sheet

Trunking, type WDK 40040

Item number: 6025412

Trunking cover and base with base perforation.

PVC Polyvinylchloride

Master data

Item number	6025412
Type	WDK40040CW
Description 1	Wall trunking system
Description 2	with base perforation
Manufacturer	OBO
Dimension	40x40x2000
Colour	Cream; RAL 9001
Material	Polyvinylchloride
Smallest sales unit	36
Unit of quantity	Metre
Weight	42.1 kg
Weight unit	kg/100 m
CO2 Footprint (GWP) Cradle-to-Gate	0,8114 kg CO2e / 1 Meter

Technical data sheet

Trunking, type WDK 40040

Item number: 6025412

Dimensions

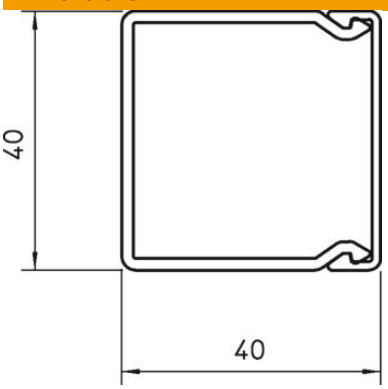

Length	2,000 mm
Width	40 mm
Height	40 mm

Technical data

Number of fixed partitions	0
Number of cables NYM 3 x 1.5 mm² Ø 10.5 mm (without socket)	7
Number of cables NYM 3 x 2.5 mm² Ø 11.5 mm (without socket)	6
Number of cables NYM 5 x 1.5 mm² Ø 12.0 mm (without socket)	5
Number of insertable partitions	0
Version, cable trunking cover	Loose
Fastening type	Base perforation
Maintain electrical functions	no
Halogen-free	no
Cable retaining clip	no
Duct connector	no
Delivery on a roll	no
Usable cross-section	1314 mm²
ROHS-conformant	yes
Protection rating	IP30
Protective film	no
Protection rating IK code	IK04
Permitted temperature range, max.	60 °C
Permitted temperature range, min.	-5 °C