# Technical data sheet

## Trunking, type WDK 60060

## Item number: 6021948

Trunking cover and base with base perforation.
Four cover clips included
Lid clamp can be moved along the entire length of the trunking.

PVC Polyvinylchloride

### Master data

| | |
|---|---|
| Item number | 6021948 |
| Type | WDK60060CW |
| Description 1 | Wall trunking system |
| Description 2 | with base perforation |
| Manufacturer | OBO |
| Dimension | 60x60x2000 |
| Colour | Cream; RAL 9001 |
| Material | Polyvinylchloride |
| Smallest sales unit | 32 |
| Unit of quantity | Metre |
| Weight | 81.6 kg |
| Weight unit | kg/100 m |
| CO2 Footprint (GWP) Cradle-to-Gate | 1,6092 kg CO2e / 1 Meter |

# Technical data sheet

## Trunking, type WDK 60060

## Item number: 6021948

### Dimensions

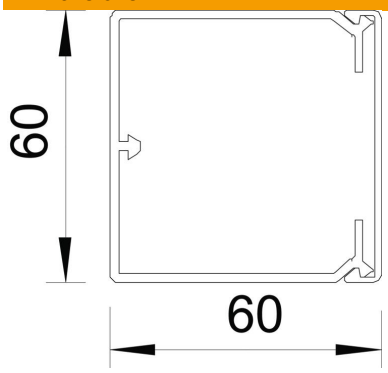


| | |
|---|---|
| Length | 2,000 mm |
| Width | 60 mm |
| Height | 60 mm |

### Technical data

| | |
|---|---|
| Number of fixed partitions | 0 |
| Number of cables NYM 3 x 1.5 mm² Ø 10.5 mm (without socket) | 16 |
| Number of cables NYM 3 x 2.5 mm² Ø 11.5 mm (without socket) | 13 |
| Number of cables NYM 5 x 1.5 mm² Ø 12.0 mm (without socket) | 12 |
| Number of insertable partitions | 1 |
| Version, cable trunking cover | Loose |
| Fastening type | Base perforation |
| Maintain electrical functions | no |
| Halogen-free | no |
| Cable retaining clip | yes |
| Duct connector | no |
| Delivery on a roll | no |
| Usable cross-section | 2863 mm² |
| ROHS-conformant | yes |
| Protection rating | IP30 |
| Protective film | no |
| Protection rating IK code | IK04 |
| Permitted temperature range, max. | 60 °C |
| Permitted temperature range, min. | -5 °C |