Technical data sheet

Joint connector FT

Item number: 6016573

Joint connector for mesh cable tray, type SGR.
Including FRS M8 x 25 bolt with flange nut.
Figure: Positioning and quantity of mesh cable tray connectors.

50–150 mm = 2 units

200–300 mm = 3 units

400–450 mm = 4 units

500–600 mm = 5 units

CE

St Steel

FT Hot-dip galvanised

Master data

Item number	6016573
Type	GUV 6 FT
Description 1	U-connector
Description 2	for mesh cable tray
Manufacturer	OBO
Dimension	24x28x30
Colour	zinc
Material	Steel
Surface	Hot-dip galvanised
Surface standard	DIN EN ISO 1461
Smallest sales unit	20
Unit of quantity	Piece
Weight	4.226 kg
Weight unit	kg/100 pc.
CO2 Footprint (GWP) Cradle-to-Gate	0,1111kg CO2e / 1 Piece

Technical data sheet

Joint connector FT

Item number: 6016573

Dimensions

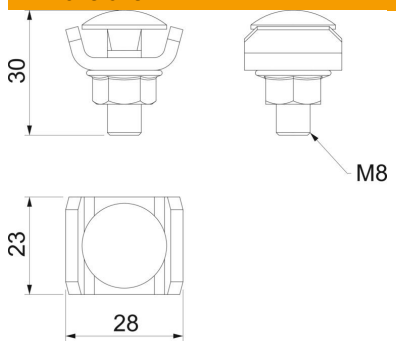

Dimension	24 x 28
Length	24 mm
Width	28 mm
Width	1.1 in
Height	30 mm
Height	1.18 in

Technical data

Maintain electrical functions	no
Suitable for mesh cable tray	yes
Suitable for cable ladder	no
Suitable for cable tray	no
Adjustable connector, horizontal	no
Articulated connector, vertical	no
Suitable for mesh cable tray wire, min.	6 mm
ROHS-conformant	yes
Rustproof steel, pickled	yes
Connection type	Screw connector