Technical data sheet

SLL 60 medium-duty vertical ladder, 6 m, FT

Item number: 6010632

Vertical ladder with a side height of 60 mm with riveted C profile rungs, open in upwards direction.
Fastening takes place directly on the wall or using the wall brackets, type WB 30/75. The slot dimension of the rung is 18 mm and the appropriate clamp clip is type 2056U.

St Steel

FT Hot-dip galvanised

Master data

Item number	6010632
Type	SLL 630 CPS 4 FT
Description 1	Medium duty vertical ladder
Description 2	with CPS rung
Manufacturer	OBO
Dimension	60x300x6000
Colour	zinc
Material	Steel
Surface	Hot-dip galvanised
Surface standard	DIN EN ISO 1461
Smallest sales unit	6
Unit of quantity	Metre
Weight	319.433 kg
Weight unit	kg/100 m
CO2 Footprint (GWP) Cradle-to-Gate	7,0356 kg CO2e / 1 Meter

Technical data sheet

SLL 60 medium-duty vertical ladder, 6 m, FT

Item number: 6010632

Dimensions

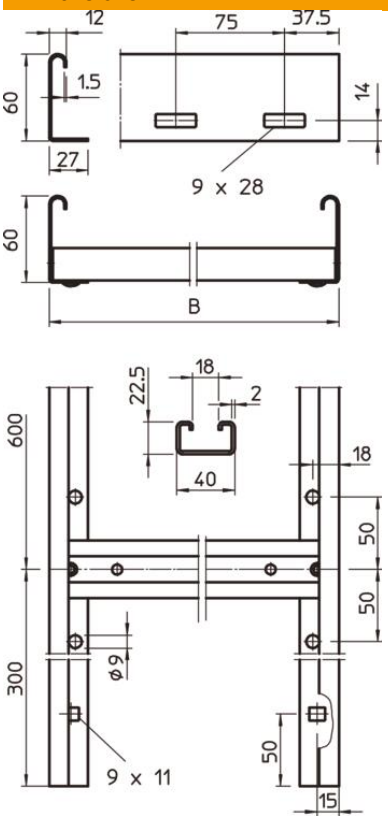

Length	6,000 mm
Width	300 mm
Height	60 mm
Dimension B	300 mm
Rung slot dimension	18.00

Technical data

Side wall version	Flat profile
Version of the rungs	Profile perforated
Maintain electrical functions	no
Usable cross-section	114 cm²
ROHS-conformant	yes
Rustproof steel, pickled	no
Side perforation	yes
Rung distance	600 mm
Rail thickness	1.5 mm